Naslov — Address:
NOVA DOBA
6117 St. Clair Ave.
Cleveland, Ohio.
(Tel. Henderson 3889)

NOVA DOBA

(NEW ERA)

Dvajset tisoč članov v J. S. K. Jednoti je lepo število, toda 25,000 bi se slišalo še lepše!

URADNO GLASILO JUGOSLOVANSKE KATOLIŠKE JEDNOTE — OFFICIAL ORGAN OF THE SOUTH SLAVONIC CATHOLIC UNION

Entered As Second Class Matter April 15th, 1926, at The Post Office at Cleveland, O., Under The Act of March 3rd, 1870. — Accepted for mailing at special rate of postage, provided for in Section 1103, Act of October 3rd, 1917, Authorized March 15th, 1925.

...O. 33—ŠTEV. 33 CLEVELAND, OHIO, WEDNESDAY, AUGUST 13TH 1930 — SREDA, 13. AVGUSTA 1930 VOL. VI. — LETNIK VI.

...RUŠTVENE IN DRUGE SLOVENSKE VESTI

...ovo angleško poslujoče dru... J. S. K. Jednote je bilo za...om avgusta ustanovljeno v ...holmu, Minn. Iz glavnega ...a je dobilo št. 215, imenuje ...e "Jubileers."

♣

...veza društev J. S. K. Jedno... Pennsylvaniji je bila usta...jena 3. avgusta v Pitts...hu. Začasni odbor je se...ljen sledeče: Ivan Varoga, ...sednik; Joseph Pogačar, ...k; John Žigman, zapisni...

♣

...ružena slovenska podporna ...ta v Lorainu, Ohio, prire...v nedeljo 17. avgusta velik ...ni piknik na Kosovi farmi. ...upini teh društev se naha...di društvo št. 6 J. S. K. ...ote, ki prijazno vabi člane ...iz Loraina in okolice na ...omenjenega piknika.

♣

...štvo Napredek, št. 132, J. ... Jednote priredi piknik v ...o 17. avgusta na prosto... Slovenskega društvenega ... v Euclidu, Ohio. Več o ...najdejo čitatelji v oglasu.

♣

...vencija K. S. K. Jednote ...čne v ponedeljek 18. avgu... Waukeganu, Ill. Priglašenih 144 delegatov in 62 dele..., skupaj torej 206; k ...e treba še prišteti 22 glav...odbornikov, torej bo 228 ...valcev. Posebnost te konvencije bo, da bo imela v svoji ...kar tri glavne predsedni... Poleg Mr. Ant. Grdine, ki ...avni predsednik KSKJ, bo...ned delegati Mr. Anton ...ik, glavni predsednik JS ... Mr. John Gornik, glavni ...ednik SDZ.

...dništvo Nove Dobe želi ...valcem konvencije KSKJ ... in bratsko delovanje in ...klepe in uspehe, ki bodo v ...lo korist našemu narodu ...deželi.

♣

...uredništvu Nove Dobe sta ...asila pretečeni teden so... John Zvezich in Mr. Jo... Steblay iz Chicaga. S svo...oprogama, Zvezichem ml. ... enim mladim sobratom, ...ega ime je urednik poza...a skušala ubežati chica...ročini v Canado. Glasom ... izročil pa se ni družba ... mudila niti v Canadi niti ...roitu. V Clevelandu se je ...e le toliko pomudila, da ...ej omenjena "komandan...rtomobilske ture posetila ...ka, ogledala si obe slo...tiskarni, obe slovenski ... in Slovenski Narodni ... Pred kosilom pa so že ...li bogvekam. Sobrat ... Zvezich je predsednik ...a Zvon, št. 70 JSKJ, in ...zelo agilen član v tam...em slovenskem društve...ivljenju. Mr. Joseph Ste...a se že dolga leta udej...e v Stavbinskih in posojil...uštvih.

♣

...ar H. G. Perušek, se je ...ro oglasil iz Yellowstone ... kmalu nato pa že iz zna...avenske naselbine Rock ..., Wyo. Od tam gre ...njat avgustovo vročino ...oloradske snežnike in v ...bogov."

♣

...ročila sta se v Clevelandu ... avgusta Miss Honey Man... Mr. Frank Vegel. Miss ..., ki je bila več let vpo... v fotografskem atelju Mr. ...nika v S. N. Domu na St.

(Dalje na 2. strani).

KRATEK TEDENSKI PREGLED

UNIJSKI DISTRIKT št. 15, U. M. W. A. v Coloradu je potom svojih zastopnikov obnovil unijsko pogodbo z Rocky Mountain Fuel Co. za dobo dveh let, namreč do 31. avgusta 1932. Plačilna lestvica ostane dosedanja in napravljene izpremembe v delavskih pogojih so neznatne.

LINČALI so v noči 7. avgusta v Marion-u, Indiana, zamorca T. Shippa in Abe Smitha. Zamorci Shipp, Smith and Cameron so ustrelili in oropali belca C. Deeterja, nakar so napadli njegovo spremljevalko Miss Mary Ball. Kmalu potem, ko so bili omenjeni zamorci aretirani in so krivdo priznali, je navalila na ječo 10 do 15 tisoč glav broječa množica razjarjenih meščanov in okoličanov, ki je stražnike razorožila, izvlekla dva zamorca iz ječe in ju obesila na bližnja drevesa. Tretjega zamorca je množica pregledala. Na prošnjo mestnega župana in šerifa je governer poslal v Marion oddelek državne milice, da prepreči morebitne plemenske izgrede.

PREBIVALSTVO Zedinjenih držav znaša po letošnjem ljudskem štetju 122.728,873. V desetih letih je narastlo prebivalstvo za 16.1% ali nekaj nad 17 milijonov oseb. To velja za kontinentalne Zedinjene države. Ako se prišteje še prebivalstvo Alaske, Filipinskega in Virginijskega otočja, Panamske kanalske zone in drugih ameriških posestev in doda še ameriško vojaško in diplomatsko osobje, nahajajoče se v inozemstvu, pronajdemo, da spada pod ameriško zastavo 137,401,561 ljudi.

GLASOM LJUDSKEGA štetja kažejo napredek v prebivalstvu vse države naše Unije (vštevši District of Columbia), z edino izjemo Montane, ki je v zadnjih desetih letih nazadovala za 2.8%. Manj kot 2% sta napredovali državi Idaho in Vermont. Največji prirastek kaže Californija, namreč za 64.6% ali skoro dva in četrt milijona prebivalcev več kot pred desetimi leti. Na drugem mestu glede napredka prebivalstva je Florida z 51.4% napredka, potem Michigan z 31.3%, New Jersey s 26.8% in Texas s 24.6%. Največ prebivalstva izkazuje država New York, namreč 12,609,555, najmanj pa država Nevada z 90,559 prebivalci. Naša najmanjša država, Rhode Island šteje 887,000 prebivalcev, po obsegu največja, Texas, pa 5,810,683.

NAJLEPŠA DEKLICA v Zedinjenih državah je Miss Beotrice Lee iz Salt Lake City, Utah. V tekmi krasotic je bila njej prisojena prva nagrada in podeljen naslov "Miss United States." Mednarodni kontest krasotic se bo meseca septembra vršil v Rio de Janeiro, Brazilija, kjer se bo Miss Lee potegovala za svetovno prvenstvo.

HUDA VROČINA, ki je skoro nepretrgano vladala več tednov skupaj, je v Clevelandu in okolici ponehala pretečeno nedeljo. Dežja sicer ni bilo, toda severni vetrovi so znatno ohladili ozračje. Temperatura je padla od 80 in 90 na 70 in celo do 60 stopinj.

ZA HLAD V VROČINI

Kako ostati hladen v vročini je pravcata znanost. Mnogo naših običajev, po katerih se ravnamo v boju proti vročini, ima znanstveno podlago, dasi se malokdo izmed nas tega zaveda. Na primer, mi kar instinktivno rabimo luknjičasta, ohlapna oblačila, in kolikor mogoče malo istih, ker vemo, da se počutimo hladne.

Razlog za to je, ker tako oblačilo dovoljuje vročini, ki jo naše telo ustvarja, da prehaja v zrak. Kajti v vročini ne gre za to, da se obranimo zunanje vročine, marveč da se iznebimo notranje vročine.

Naj bo vreme vroče ali mrzlo, naša telesna temperature mora ostati normalna. V hladnem vremenu telesna vročina prehaja zlahka v nižjo zunanjo temperaturo. Ali ko temperatura okoli nas postane skoraj tako visoka, kakor naša notranja temperatura, je težko iznebiti se prebitečne vročine našega telesa.

Da pa to vendar dosežemo, moramo najprej preprečiti, da naše telo proizvaja preveč vročine s tem, da ga zalagamo z manj kuriva, namreč hrane. Jeli bomo manj, zlasti pa take hrane, ki ima visoko kurilno vrednost in ki povzroča veliko notranjo vročino. Take jedi so sladkarije, škrobne jedi in protejine (mesne jedi, katere dietičarji nazivajo jedi visoke "kalorije").

Drugi način, da ostanemo hladni je, da se znojimo. Nobena snov ne more prevažati toliko vročine, ne da bi to pokazala, kot voda. Seveda treba piti mnogo vode, da nadopolnimo zalogo vode v telesu. Ljudje, ki se mnogo ne znojijo, se bodo boljše počutili v vročini, ako pijejo vroč čaj ali kavo mesto ledenih pijač, kajti vroče pijače pospešujejo znojenje.

Ako izpotite liter vode, iznebili ste se približno 500 kalorij vročine. (Kalorija je toplotna enota in predstavlja količino vročine, ki je potrebna, da se temperatura enega kilograma vode poviša za en centigrad). Ali ako zrak vsebuje že toliko vode ali vlage, kolikor je more držati, se ne morete shladiti potom iznojenja vročine. To je vzrok, zakaj vročina zvezana z vlažnostjo je tako neznosna. Ob taken vremenu treba odganjati vlažne plasti zraka okolo telesa. Zato rabimo pahljačo, ako ni druge sape.

Vse te stvari smo navajeni storiti, ali kalokdo ve, zakaj jih storimo.

Tukaj je nekoliko pravil, kako naj ostanemo hladni v vročini:

1. Treba jesti zmerno in zlasti izogibati se jedem, ki imajo visoke kalorije.
2. Imejte na sebi ohlapna in luknjičasta oblačila.
3. Namočite telo z mlačno vodo in pustite, naj se izhlapi.
4. Pijte mnogo hladne vode.
5. Pijte gorkega čaja ali kave in ne ledene.
6. Ostanite v senci, ali nosite klobuke s širokimi krajci ali pa solčnik.
7. Izogibajte se alkoholičnim pijačam.
8. Naj bo zrak okoli vas v obtoku, če ne drugače s pomočjo pahljač.
9. Pred vsem pa ne govorite o vročini. Misliti na vročino je še najhujše.

F.L.I.S.

PROTI MOLJEM

Za milijone dolarjev škode povzročijo vsako leto molji na kožuhovini in volnenih oblekah. Mali moljevi metuljčki, ki jih vidimo poleti frfotati v podstrešju ali kjerkoli v hiši, sami na sebi ne povzročajo nikake škode; nič ne jedo, torej prežive svoje kratko življenje prav idealno in nedolžno. Edina njih napaka je, da zaležejo drobna jajčeca v kožuhovino ali razne tkanine. Iz teh drobnih jajčec izleženi črvi so pravi molji in ti izvrtajo tisoče luknjic v sukno ali drago kožuhovino.

Na trgu so različna sredstva, ki preganjajo ali uničujejo molje. Navadno pa imajo ta sredstva precej zoprn duh in za boljše vrste obleke in kožuhovine niso posebno priljubljena.

Zvezni poljedelski department je nedavno naznanil, da se dobi v lekarnah neko kemično sestavino, ki zanesljivo uniči molje, le da se mora rabiti v zaprtih skrinjah ali prostorih.

To sredstvo proti moljem, ki je poceni na prodaj v vseh lekarnah, se imenuje "Paradichlorobenzene." V navadni temperaturi to kemično sredstvo počasi izhlapeva in tvori pline, ki niso škodljivi človeku, pač pa smrtonosni moljem in drugim podobnim škodljivcem. Plini tudi ne škodujejo tkaninam in kožuhovini.

Kot že omenjeno, je to sredstvo proti moljem uspešno le, če se ga rabi v trdo zaprtih prostorih, na primer v skrinjah in kovčekih. Ako se rabi v sobicah ali čumnatah za obleko, treba je vse špranje dobro zamašiti. Na 6 do 10 kubičnih čevljev prostornine se rabi en funt te kemične tvarine, ki se imenuje "paradichlorobenzene."

Kakor v pravljicah

Revni krošnjar B. iz nekega poljskega mesta je prišel k mlademu kmetu N., da bi od njega kupil, kakor že večkrat prej, kakšno staro kožo. N. mu pravi, da ima takšno kožo, a da mu jo proda le, če mu plača zanjo 10 zlotov, ne da bi si jo prej ogledal. B. je pristal. Tedaj ga je povedel kmet v sobo, kjer je sedel star možakar, njegov oče, pokazal mu ga je in menil: "To je stara koža, ki sem ti jo prodal." Krošnjarju se je starec smilil, pa ga je odvedel s sabo, v svoje stanovanje, kjer ga je preživljal celih 6 mesecev. Stari pa je bil vesel, da mu ni treba živeti pri surovemu sinu. Nekega dne je dospela nepričakovana novica: Starčev brat, ki se je bil izselil v Ameriko, je umrl in mu je ostavil 25,000 dolarjev! Starec je bil sedaj bogat mož, a je svoj denar dobro naložil: določil je, naj pripade po njegovi smrti krošnjarju - poštenjaku, Kmalu potem je umrl. Njegov sin je sedaj poskusil vse, da bi razveljavil starčevo poslednjo voljo. Pomagalo pa mu ni nič. Te dni se je vršila razprava in sodniki so potrdili, da je krošnjar dedič starčevih dolarjev. Za današnje čase pač redek primer, da se dobro dejanje dobro poplača. . .

Denar v kladi

Jacob Dunder v Mountainside, N. J., je cepil drva na stari kladi na dvorišču. Naenkrat se je pod sekiro nekaj posvetilo, in po preiskavi je našel v izvrtanih luknjah nad 3000 srebrnih dolarjev, katere je bil tam varno spravil njegov oče, ki bankam ni zaupal.

UMETNA HRANA RASTLIN

Načelnik departmenta rastlinske fizijologije californijske univerze, dr. W. F. Gericke, je po dolgih poskušnjah izdelal pilule, s katerimi je mogoče zelo pospešiti rast in razvoj različnih rastlin. Tozadevne poskušnje v laboratorijih so povzročile pri rastlinah skoro neverjetno bujno rast, zato so s temi rastlinskimi pilulami začeli delati poskušnje na prostem, in sicer v velikem obsegu. Uspehi so bili nad vse zadovoljivi. Za poskušnje so vzeli 15 do 40 akrov obsegajoče farme, in pronašli so, da je pridelek pri sladkorni pesi ali pri sladkornem trsu za 75 procentov večji, pri salati, korenju, repi, zeleni in drugi zelenjavi pa od 50 do 100 odstotkov. Izumitelj rastlinskih pilul, dr. Gericke, je sodeloval z vrtnarji in s farmerji, ki so mu šli drage volje na roke pri njegovih eksperimentih.

V vsaki rastlinski piluli je sedem elementov rastlinske hrane v različnih količinah, da 'dijeta' odgovarja različnim rastlinam. V malih, cilindrskih pilulah se nahaja dušik (nitrogen), fosfor, magnezija, železo, potaš in žveplo; sedmi element, apnenec (calcium) tvori ovitek. Pilule se zamorejo potisniti naravnost v zemljo k rastlinam, toda še boljše je, če se raztopijo v vodi in se ta raztopina prilije ali napelje k rastlinam.

Poskuse z rastlinskimi pilulami so delali dr. Gericke in njegovi pomočniki v najrazličnejših legah in krajih, na peščenih puščavskih tleh in na megleni morski obali, kjer je dežja v obilici. Povsod so se poskusi izborno obnesli.

Glavice salate so zrastle 75 do 125 procentov večje na gredah, kjer so se porabljale rastlinske pilule. Sladkorne pese so pridelali 175 ton na akru, kjer so jo hranili s pilulami, to je vsaj 50 ton več kot na sosednih akrih, gnojenih in obdelovanih po običajnem starem načnu. Pesa, gnojena s pilulami, je mehkejša in vsebuje več sladkorja.

Gnojenje s pilulami se je izborno obneslo tudi pri raznih žitih. Zrna pšenice in drugih žit so bila večja, klasje večje, z večjim številom zrn, žito je hitreje rastlo in bolj zgodaj dozorelo. Poleg tega so pronašli, da je kruh, izdelan iz moke takega žita okusnejši. Ena največjih mlinskih družb na severozapadu je letos s pomočjo in po navodilu dr. Gericka pognojila z rastlinskimi pilulami tisoč akrov obsegajočo pšenično njivo. Ako se poskus na veliko obnese tako izborno kot so se poskusi v malem obsegu, upa omenjena družba v krajšem času pridelati več pšenice na manjšem prostoru kot prej, poleg tega, da bo moka imela bolji okus in več hranilne vrednosti.

Za enkrat je izdelovanje rastlinskih pilul še skrivnost dr. Gericka in californijske univerze. Na trg bodo prišle omenjene pilule šele, ko bo njih izdelovanje tako poceni, da jih bo lahko kupil vsak farmer, sadjar, vinogradnik in vrtnar. Tako bo izum služil splošni blaginji in ga ne bodo mogli monopolizirati nekateri posamezniki.

Sin in oče predsednika

John Scott Hårrison, ki je bil rojen v Indiani leta 1804, je bil sin William Henry Harrisona, devetega predsednika Zedinjenih držav; njegov sin Benjamin Harrison pa je postal 23. predsednik Zedinjenih držav.

GLASOVI Z RODNE GRUDE

Na večer 18. julija je hudo neurje napravilo veliko škodo v Kranju in okolici. En pas silne vihre je drvil preko Gorenje Save, preko kranjskega polja mimo gradu Prevoje do posestva grada Brdo in do Suhe. V ozkem pasu je izruval okrog 100 velikih smrek. Drugi del vihre je šel preko mesta, zlasti preko Pungrata, preko vasi Huje, Klanec, Primskovo, Britof, Gorenje in Visoko. Samo kozolcev, ki so bili napolnjeni z žitom, je vihar prevrgel, razmetal in polomil nad 150. Najbolj sta prizadeti vas Huje in občina Stražišče. Velik del škode odpade tudi na drevje, sadno in gozdno. Samo enemu posestniku v Hujah je vihar izruval skoro 50 sadnih dreves.

Velika škoda po viharju v Bosni. Kakor poročajo iz Sarajeva, je toča v zadnjih dneh v okolici Visokega, zlasti med Kaknjem in Podlugovim napravila ogromno škodo. Prizadetih je približno osemdeset vasi. Škoda je uradno cenjena na 10 milijonov dinarjev. Uvedena je državna pomožna akcija.

Muslimanka-učiteljica. Banjaluška muslimanka Emina Muhurdarevićeva je absolvirala letos s prav dobrim uspehom žensko učiteljišče v Beogradu. To je baje prva muslimanka v Bosni, ki se posveti učiteljskemu poklicu.

75 tožb proti komandantu parobroda "Morosini." Pri okrožnem sodišču v Šibeniku, ki bo sodilo o katastrofi v Pašmanskem kanalu, pri kateri je bil težko poškodovan luksuzni parnik "Karagjorgje," je bilo doslej vloženih 75 tožb privatnih oseb, ki so bile ranjene ali oškodovane zaradi katastrofe. Med tožitelji je 5 jugoslovenskih državljanov, 11 poljskih in 59 češkoslovaških. Kakor doznava "Politika," bo državno pravdništvo proti komandantu "Morosinija" predlagalo smrtno kazen.

Iz Mirne na Dolenjskem pišejo: Različna golazen, ki uničuje poljske pridelke tudi naši občini ne bo prizanesla. Pri vasi Stan v občini Mirna so se pojavile rujave kobilice v taki množini, da resno ogražajo polje in košenino. Kamor se vsedejo, uničijo dobesedno vse, tako, da so kmetje omenjenih vasi v resnih skrbeh za prehrano svinj in goveje živine.

27 šrapnelov v vodnjaku. Ob priliki čiščenja nekega vodnjaka v predmestju Zemuna, ki je bil med vojno zasut, so delavci v globočini 19 metrov naleteli na 27 tempiranih šrapnelov. Po odredbi vojaške komisije so bili šrapneli prepeljani tri kilometre izven mesta ter tamkaj razstreljeni.

Človek, ki se je obesil zaradi bede, zadel v razredni loteriji 10,000 dinarjev. Kakor poroča "Vreme," se je v Šitkovicu obesil šofer Najdan Milojković, ki je s svojo rodbino živel v veliki bedi in zato prostovoljno šel v smrt. Nasrednjega dne pa je bila njegova vdova obveščena, da je pokojnik v razredni loteriji zadel 10,000 dinarjev. Če bi bil nesrečni šofer svojo bedo prenašal vsaj še en dan, bi si gotovo ne bil tako tragično končal življenja.

VSAK PO SVOJE

Ko to pišem, obkroža me še vedno tipična vročina Pasjih dni. Dokler živo srebro v toplomeru ne prileze do 90 ali čez, se sploh ne zmenim zanj. Potem pa od časa do časa pogledam in komentiram: Hot dogs!

*

Nedavno sem čital v starokrajskih listih, da je neki dan znašala toplota v Ljubljani 33 stopinj Celzija in da je vse kar omedlevalo vročine. Po našem štetju je to samo 81 stopinj Fahrenheita, kar se nam zdi prijeten pomladni hlad.

*

Zadnja izdaja Nove Dobe je bila po veliki večini uradna, bogato opotičena s številkami. Glavni urednik in urednik angleške sekcije sta vse te številke, od prve do zadnje, prečitala, nekatere še po večkrat. Isto sta storili najmanj dve osebi v glavnem uradu Jednote. Ako je še kdo drugi izmed 13,855 članov JSKJ zdaj v Pasjih dneh to storil, zasluži zlato medaljo. Zase vem, da ne bi, če bi tega ne zahtevala uradna dolžnost.

*

Pasjim dnem morajo logično slediti pasje noči. V teh nočeh nekateri sanjajo o severnem tečaju, o ledenih gorah, o penečem se pivu in s slatino mešanim vinu, o Rocky Mountains, o Canadi ali o gorenjskih snežnikih, jaz pa o samih suhih in pustih številkah. In vse so tako zverižene, skrivljene, puste in suhe, kot je trava v mestnih parkih in ob zaprašenih potih.

*

Ameriški zvezni senat je v posebnem poletnem zasedanju nenavadno hitro rešit in potrdil pogodbo o regulaciji pomorskega oboroževanja. K temu ga je silila huda pasjednevna vročina.

Tudi konvencije nekaterih naših podpornih organizacij so določene za julij ali avgust. To je neke vrste ekonomija. Prihodnja konvencije J. S. K. J. se bo vršila v gorkem juliju v gorkem Indianapolisu. O boy, ali bo šlo hitro!

*

V časopisih se včasi vsipljejo hude obdolžitve in gromki argumenti na glave grešnikov in namišljenih grešnikov. Potem človek nekaj časa z napetostjo čaka na protiofenzivo, pa ni od nikoder nič. Rezultat je prav tak, kot če sosedov kužek laja na kovača v luni. Meni ni znano, kako se radi tega počutijo poveljniki gromskih ofenziv in avtorji glasnega laježa, in mi tudi nič v nos ne gre, toda pri vsaki taki priliki se domislim dogodbice, katero mi je pripovedoval rojak gori na zelenem severu in ki je s častno besedo zatrdil, da je resnična.

Nekega večera je bil prišel nekoliko minut ali ur pozneje domov, kot bi bil moral glasom domače ustave, pravil in paragrafov. Še preden je vtegnil reči "dober večer," ga je njegova boljša polovica obsula z litanijami vseh tistih, ki niso svetniki, katerim je dodajala dolge in krepke komentarje. Mož pa je med tem tiho slačil suknjo, odpenjal ovratnik in sezuval čevlje, kar se v takih poznih večernih urah navadno vrši zelo preudarno in počasi. Petelin je prvič in drugič zapel, litanij pa še ni bilo konca, in mož je še vedno modro molčal. Končno je mož skozi okno po-

(Dalje na 2. strani).

"Nova Doba"

GLASILO JUGOSLOVANSKE KATOLIŠKE JEDNOTE

Lastnina Jugoslovanske Katoliške Jednote.

IZHAJA VSAKO SREDO

Cene oglasov po dogovoru.

Naročnina za člane 72c letno; za nečlane $1.50, za inozemstvo $2.

OFFICIAL ORGAN
of the
SOUTH SLAVONIC CATHOLIC UNION, Inc., Ely, Minn.

Owned and Published by the South Slavonic Catholic Union, Inc.

ISSUED EVERY WEDNESDAY

Subscription for members $0.72 per year; non-members $1.50

Advertising rates on agreement

Naslov za vse, kar se tiče lista:
NOVA DOBA, 6117 St. Clair Ave. Cleveland, O.

VOL. VI. 83 NO. 33

Ne mislimo samo nase.

Po naravnih zakonih se človek kot vsako drugo živo bitje v prvi vrsti briga zase, za svojo eksistenco. To je potrebno in pravilno, kajti brez lastnih moči in zmožnosti in brez primerne skrbi zase, bi ne mogel biti nikomur v korist, ampak bi bil le v breme splošnosti. Skrb za samoohranitev nam je prirojena in je popolnoma na mestu, dokler ne prekorači gotovih mej.

Pri nekaterih posameznikih pa se skrb za samoohranitev izpremeni v sebičnost in požrešnost, kar je huda šiba za človeško družbo. Če bi človek živel sam zase kot volk v gozdu, bi bila take sebičnosti oprostljiva, toda ljudje živimo v družbi, zato imamo gotove dolžnosti napram isti.

Da je dolžnost starišev skrbeti za njihove otroke, to se v splošnem smatra za nekaj samoumevnega. Prav tako nekaj samoumevnega pa bi nam moralo biti tudi imeti gotove obzire do drugih ljudi, v prvi vrsti seveda do prijateljev in sorojakov, potem pa do človeštva v splošnem. Ako bi bilo na svetu manj sebičnosti, bilo bi manj izkoriščanja in več splošnega blagostanja.

Življenje brez prijateljstva ni vredno svojega imena. Sebični človek, ki pozna le sebe, svoj žep in svoj lastni dobrobit, ne more imeti dobrih in odkritosrčnih prijateljev.

Tisočkrat se križajo naša pota s cestami in stezami drugih ljudi, kar zahteva nekoliko obzirnosti od nas vseh. Nešteviline so prilike, ki zahtevajo od nas take obzirnosti, na videz včasi malenkostne, toda zato nič manj važne. Če bi vedno vpoštevali geslo, da bodimo tako obzirni, vljudni in uslužni napram drugim, kot želimo, da bi bili drugi napram nam, ako bi se vedno zavedali, da smo vsi ljudje enako upravičeni do življenjske sreče in uživanja naravnih lepot in dobrot, bilo bi mnogo lepše na svetu.

Ako ne moremo sočloveku ali večjim ljudskim skupinam pomagati in koristiti, jim vsaj ne škodujmo. Priznajmo drugim iste pravice kot jih sami zahtevamo ali si jih vsaj želimo. Nihče namenoma ne poškoduje svoje lastnine, in istega pravila bi se morali držati glede lastnine drugih. Naravne lepote so lastnina vsega človeštva in ako jih pokvarimo, oškodovali smo splošnost.

V tem letnem času so na programu pikniki in izleti v prosto naravo, in pri takih prilikah postopajo nekateri piknikarji škandalozno. Brez potrebe lomijo drevesa, pustošijo polja in livade, vsled neprevidnega ravnanja z ognjem dostikrat povzročijo požare, lepa naravna svetišča onesnažijo, da so videti kot zapuščeni ciganski tabori. Zdi se, da bi jim ne bilo niti malo mar, če bi se za njimi ves svet izpremenil v pogorišče ali smetišnico. Da je le njim prav, vse drugo je zanje brez pomena.

Tudi v besedah bi bili morda včasi bolj prizanesljivi in obzirni, če bi pomislili, da trda in žaljiva beseda ali neopravičena graja druge prav tako boli kot bi bolela nas. V marsikaterem oziru bi lahko olepšali življenje ne le drugim, ampak tudi nam samim, če bi včasi nekoliko mislili tudi na druge.

Kdor zavaruje sebe in svoje drage pri dobri podporni organizaciji, kot je na primer naša J. S. K. Jednota, je že s tem dokazal, da ima nekaj obzira do splošnosti in do svojih sorojakov, katerim ne mara za slučaj bolezni ali nesreče nakladati nepotrebnih bremen. Kdor pa gre še dalje in pridobi tudi svoje prijatelje za pristop v J. S. K. Jednoto, še bolj jasno dokaže, da ni sebičnež, ampak da mu je pri srcu tudi dobrobit drugih. Skušajmo biti vsi taki!

IZ URADA GLAVNEGA TAJNIKA

RAZPIS IZREDNEGA ASESMENTA NA ČLANE, KI SO ZAVAROVANI V RAZREDU ZA $2.00 DNEVNE BOLNIŠKE PODPORE

V razredu za dva dolarja dnevne bolniške podpore je zopet nastal primankljaj. Vsled tega se razpisuje izredni asesment po EN DOLAR na mesec, na one člane, ki so zavarovani za dva dolarja dnevne bolniške podpore. Izredni asesment ostane v veljavi, dokler se ne nabere po pravilih predpisana rezerva. Omeniti je vredno, da je primankljaj veliko nižji nego je bil pred enim letom in pričakuje se, da bo razred za $2.00 dnevne bolniške podpore prišel na normalo v nekaj mesecih ako ne bo preveč novih slučajev bolezni. Novi člani so izvzeti od izrednega asesmenta za prvih 90 dni po pristopu. Izredni asesment se razpisuje od 1. avgusta naprej.

Dano v glavnem uradu dne 25. julija, 1930.

Joseph Pishler, glavni tajnik.

GOZDNA

Nad gozdom zlata krona sije—
studenec čez zelene skale
razpenjene preliva vale,
navzdol v tolmun globoki bije.

Bršljan gre k smreki vasovat
in črne jagode ji nese,
iz jelševja reži se škrat,
od smeha se mu trebuh trese.

(Cvetko Golar).

VSAK PO SVOJE

(Nadaljevanje iz 1. strani)

gledal severni sij, ki se je igral nad gozdovi in jezeri, se na tihem priporočil boginjam spanja za lepe sanje, nakar je sedeč na svoji postelji nedolžno vprašal gazdarico:

"Ali nisi nekaj rekla?"

S tem je bilo pridige in storije konec. Petelin v kuropetniku je tretjič zapel, severni sij je vztrepetal nad vrhovi temnih smrek, gospodinji pa je tisto nedolžno vprašanje vzelo besedo za ves teden. Kdo je bil v besednem boju zmagovalec, mož ni povedal, a jaz imam svoje mnenje.

*

Po srednjem zapadu vlada taka huda suša, da se na poljih suši koruza in da farmerji izkopavajo napol pečen krompir. Čudno, da si tudi za to ne prisvajajo kredita zagovorniki Volsteadove postave!

*

Nobenega dvoma ne more biti, da so v deželi res slabi časi, kajti tudi žepni tatovi so se začeli pritoževati, da se business ne izplača.

*

Listi poročajo, da so fašistovski stražniki na švicarsko-italijanski meji streljali na sv. Bernarda menihe in njihove pse, ki so skušali na švicarski strani poiskati in rešiti neko Italijanko, ki je ušla preko meje in ponesrečila v skalovju. Menihi se ušli neranjeni, en pes-bernardinec pa je bil ustreljen. The Cleveland Press pristavlja k temu incidentu: "Če bi svet imel izbirati med bernardincem in Mussolinijem, izrekel bi se za psa."

*

Te dni sem se stehtal in tehtnica je pokazala 151 funtov. (Štiri funte so mi požrli polletni računi v zvezi s Pasjimi dnevi.) Zdaj vem, zakaj je stari gugalni stol v "uredništvu št. 2" vzdržal mene par let, sobrata Kroteca iz Pittsburgha pa samo pol ure! Naprej pa ne povem, dokler se ne odločim za kolekto "stolodarov."

*

Neki poročevalec se zelo zanima za zgodovino umetne solnčne rože, ki jo je videl na pikniku Slovenske šole v Clevelandu in ki je bila baje meni posvečena. Skrb poročevalca je nepotrebna. Solnčne rože so sicer včasi nevarne, toda ne tiste, ki so iz samega papirja in židanih cunj!

A. J. T.

DRUŠTVENE IN DRUGE SLOVENSKE VESTI

(Nadaljevanje s prve strani)

Clair Ave., in aktivna pri različnih slovenskih prireditvah, je splošno znana in popularna med clevelandskimi Slovenci, ki ji želijo v novem stanu vse najboljše.

♠

Vsi telovadni odseki Slovenskega Sokola v Clevelandu so pričeli zopet z rednimi vajami 11. avgusta. Načelstvo poziva stariše otrok, ki so telovadili dosedaj, da jih pošiljajo k vajam tudi v bodoče. Ne stane nič, otroci pa zahajajo v dobro družbo in se telesno krepijo. Dobrodošli bodo tudi novi mladi kandidati in kandidatke.

♠

Drugo nagrado je dobil pri tekmi telovadcev Gimnastic Union v Clevelandu, ki se je vršila 20. julija v Brookside stadiju, Slovenec John Marinček, načelnik Slovenskega Sokola. Izmed 180 telovadcev, ki so tekmovali posamezno, je bil Slovenec Marinček drugi najboljši. Lahko so ponosni na to ne le njegovi bratje Sokoli, ampak tudi vsi ostali Slovenci v Velikem Clevelandu.—Na Delavski Dan se poda sedem slovenskih Sokolov iz Clevelanda v Detroit, kjer bodo tekmovali s češkimi Sokoli.

Vsi otroci članov J. S. K. Jednote bi morali spadati v mladinski oddelek iste organizacije!

CVETLIČNI PRAZNIK

(A. J. T.)

Cvetlice predstavljajo v nekem smislu višek naravnih lepot, zato ni čudno, če se jih poslužujemo za izražanje čuvstev lepote, veselja, ljubezni, hvaležnosti in nežnosti. Mnogo je postojank med rojstvom in pogrebom, kjer so cvetlice na mestu. Lahko bi rekli, da nas pri različnih prilikah cvetlice veselijo, navdušujejo za vse lepo in dobro, se jočejo z nami in nas tolažijo. Niso neobhodno potrebne za našo ekistenco, toda lepšajo nam življenje, kakor nam ga lepša sladka godba ali petje, prijateljski razgovor, lep pogled, besede priznanja, ptičje žvrgolenje, dih pomladi, čar poletne noči, itd. človek ne živi samo od kruha . . .

Moje mnenje je vsekakor, da cvetje naj bi bilo v prvi vrsti posvečeno živim. Takih nazorov je bil tudi pesnik Gregorčič, ki je zapisal: "V življenju trnja, a cvetja na grob! Pač bolje bi bilo narobe: sadite nam raje v življenju cvetlic, a trnje shranite za grobe!" Ne da bi hotel komu dajati kakšna navodila, si drznem trditi, da je več vreden in več koristi skromen šopek cvetja bolniku, ki se dolgočasi v bolnici, kot vozovi prelestnih vencev, ki drve za mrličem. Dajte solnca, dajte nam življenja, dajte nam cvetja!

Te vrstice pišem pod vplivom "cvetličnega dne" Slovenske šole S. N. Doma v Clevelandu, ki je tvoril posebnost piknika dne 3. avgusta t. l. V vencu neštevilnih, dostikrat monotonih, obrabljenih in takorekoč vsakdanjih prireditev med ameriškimi Slovenci je bil ta "cvetlični dan" novost, ki je vzbudila mnogo pozornosti. Ni bilo brez pomanjkljivosti, ker je bil pač začetek, pa tudi sezona je bila skrajno neprikladna. V žgoči pasjednevni vročini cvetlice hitro ovenejo, poleg tega pa je nežno cvetje pomladi in zgodnjega poletja bilo v splošnem že minilo. Iz tega sledi, da bi bilo umestno, če bi Slovenska šola prihodnji cvetlični dan napravila koncem maja ali začetkom junija.

Uspeh prireditve je bil kljub začetništvu in kljub neprimerni sezoni zelo dober, za kar je treba dati nerezervirano priznanje našim narodnim delavkam, ki so si to reč zamislile, in brhkim cvetličarkam, ki so v dobri uri poplavile ves veselični prostor s cvetjem. Nemala zasluga gre tudi tistim, ki so brezplačno prispevali cvetlice, katere so prinesle lepo denarno svoto blagajni Slovenske šole. Mnogo cvetlic sta prispevali slovenski cvetličarni Julia's Flower Shoppe, in Slapnik Bros. Dalje mi je znano, da so prinesle velike šope lepih cvetlic Miss Frances Gerbec, Mrs. Mary Ivanush in Miss Mary Križmančič. Bilo je še več darovalk cvetja, katerih imena pa mi žal niso znana. Vsem naj bo v plačilo zavest, da so znatno pomagali naši dragoceni narodni ustanovi, ki nosi ime Slovenska šola S. N. Doma v Clevelandu.

Na pikniku Slovenske šole so tvorili posebnost štirje paviljoni, ki so nekako spominjali na štiri "evangelije" o priliki proščenj. Najbolj obiskovan je bil seveda glavni paviljon, kjer so delili blagoslove natakarji in kuharice. Paviljon sladoleda so obiskovale mladinske procesije in prilično isto je veljalo za paviljon "popa."

Cvetlični paviljon je razdeljeval cvetlice "wholesale" in deloma tudi "retail." Pisano je bilo, sklenjeno in zapečateno, da moram biti poslovodja tega paviljona jaz, in ker nisem imel nobenih instanc, kamor bi se pritožil, sem se podal. Ta paviljon je bil prav čedno spleten iz zelenih vej, pri vsem tem pa ozračje ni bilo dušljivo, ker je bilo med listjem vendar nekaj prostora za zrak in solnce. Na mizi je bilo tisoče poletnih cvetlic v posodah z vodo, kateri je bilo treba pridevati leda, da ni zavrela. Kuhane cvetlice so sicer moderne na Kitajskem, med Slovenci pa še ne. Nad vsem tem pa se je kot orijentalski baldahin širila ogromna solnčna roža. Žal, da je bila "fovš," ali kakor bi rekli po ameriško: "artificial." Pa je že tako, večina titularnih solnčnih rož je itak goljufiva ali "fovš." Priznanje in hvaležnost pa moram izreči tistim, ki so prinesle pravih svežih solnčnih rož, v katerih ni prevare.

Prvi poskus s cvetličnim dnevom je bil uspeh, ne zato, ker je bilo vrhovno cvetličarstvo poverjeno moji malenkosti, ampak kljub temu.

Kako je bilo drugače s piknikom, mi ni dosti znano. Videl sem mal odlomek nastopa malih Sokolic in nekako polovico cvetličnega plesa, ki so ga zelo gracijozno izvajale dražestne cvetličarke, oblečene kot "dečve." Plesu je sledilo navdušeno ploskanje občinstva, jaz pa sem pri tem zelo prozajično ugibal, kako se bodo te revice zvečer umivale, kajti prahu je bilo do gležnjev. Umivanje nog je še pri meni zahtevalo skoro pol funta mila, dasi se plesa nisem dejansko udeležil niti z eno stopinjo.

Po plesu so se naše "dečve-cvetličarke" zavzele, da morajo vsi posetniki piknika biti "v rož'cah," in uspelo jim je imenitno. Druga za drugo so se pojavljale s praznimi ali napol praznimi pletenicami v "glavnem stanu" pod solnčno rožo, da se jih opremi z novo zalogo cvetlic. Bile so kot "metuljčki, ki sladki med pijo na gostoljubnem cvetji . . ." Priplavajo in odplavajo. Kaj se hoče, menda že tako govore postave in preroki.

Najbolj vztrajno se me je držal mali pudelj, ne vem kakšne pasme in katerega gospodarja. Požrtvovalno mi je pomagal čuvati cvetlični zaklad. Ne vem, kaj ga je privedlo v mojo druščino. Morda polzavestna slutnja o pasji sreči, katero delim z mojimi štirinogatimi sodržavljani že desetletja, morda mu je kdo vtepel v mlado pasjo glavico geslo "svoji k svojim." Mlademu pudeljnu ni zameriti, če po svoji pasji pameti tako nediskretno išče tovarišev-sotrpinov. Pasja pamet in pasji okus! Jaz sem bil pa le vesel in ponosen, da sem imel pod "fovš" solnčno rožo vsaj enega absolutno nesebičnega tovariša. In to sredi idilično razbeljenih Pasjih dni!

Starost živali

Škotski profesor Peacock, ki se je mnogo let pečal s proučavanjem dolgosti življenja različnih živali, je sestavil sledečo zanimivo statistiko: Velike želve žive 150 do 200 let, nemški karp do 150 let, beloglavi jastreb 118 let, orel do 104 leta. Papige, vrane, krokarji in neke polarne race dožive po 100 let. Pes doživi starost 30 let, konj 40, krava 25, mačka 40, kokoš 30, gos 57, lev in tiger po 25, slon pa do 70 let. Najkrajše življenje imajo žuželke. Neka muha, imenovana stylops, živi od ene do treh ur, navadna hišna muha okrog 34 dni. Matica pri mravljah pa doseže starost 13 let, neki lesni hrošček pa celo 37 let.

Najstarejše drevo

Za najstarejše rastoče drevo na svetu smatrajo nekateri botaniki cipreso, ki raste v Santa Maria del Tula v Mehiki. Sodi se, da je drevo staro 4,000 do 6,000 let.

Dolgost krokodilov

Najdaljši krokodili, ki so bili izmerjeni, niso presegali dolgosti 20 čevljev. Piše se včasi o 30 čevljev dolgih krokodilih, toda to je najbrže pretirano.

Jugoslovanska Kat. Jednota
Ustanovljena l. 1898 Inkorporirana l. 1901

GLAVNI URAD V ELY, MINN.

Glavni odborniki:

Predsednik: ANTON ZBAŠNIK, 5400 Butler St., Pittsburgh, Pa.
Podpredsednik: PAUL BARTEL, 901 Adams St., Waukegan, Ill.
Tajnik: JOSEPH PISHLER, Ely, Minnesota.
Blagajnik: LOUIS CHAMPA, 416 East Camp St., Ely, Minn.

Vrhovni zdravnik:

DR. F. J. ARCH, 618 Chestnut St. N. S. Pittsburgh, Pa.

Nadzorni odbor:

Predsednik: RUDOLF PERDAN, 933 E. 185th St., Cleveland, O.
1. nadzornik: JOHN MOVERN, 412—12th Ave. E., Duluth, Minn.
2. nadzornik: JOHN KUMŠE, 1735 E. 33rd St., Lorain, O.
3. nadzornik: JOHN BALKOVEC, 5400 Butler St., Pittsburgh, Pa.
4. nadzornik: WILLIAM B. LAURICH, 1845 W. 22nd St., Chicago, Ill.

Porotni odbor:

Predsednik: JOSEPH PLAUTZ, 432—7th St., Calumet, Mich.
1. porotnik: JOSEPH MANTEL, Ely, Minn.
2. porotnik: ANTON OKOLISH, 1078 Liberty Ave., Barberton, O.

Jednotino uradno glasilo:

NOVA DOBA, 6117 St. Clair Ave., Cleveland, O.
Urednik in upravnik: A. J. TERBOVEC.

Vse stvari tikajoče se uradnih zadev kakor tudi denarne pošiljatve naj se pošiljajo na glavnega tajnika. Vse pritožbe naj se pošilja na predsednika porotnega odbora. Prošnje za sprejem novih članov in bolniška spričevala naj se pošilja na vrhovnega zdravnika.

Dopisi, društvena naznanila, oglasi, naročnina nečlanov in izpremembe naslovov naj se pošiljajo na: Nova Doba, 6117 St. Clair Ave., Cleveland, Ohio.

Jugoslovanska Katoliška Jednota se priporoča vsem Jugoslovanom za obilen pristop. Kdor želi postati član te organizacije, naj se zglasi tajniku bližnjega društva JSKJ. Za ustanovitev novih društev se pa obrnite na gl. tajnika. Novo društvo se lahko ustanovi z 8 člani ali članicami.

DOPISI.

Sumner, Wash.

Upam, da mi sobrat urednik preskrbi nekoliko prostora v Novi Dobi, da se zahvalim dragim bratom in sestram društva Bratje Svobode, št. 162 JSKJ, za njih velikodušno pomoč. V svrho lažjega razumevanja naj mi bo dovoljeno nekoliko opisati moj položaj. Moj mož me je zapustil in odšel neznano kam, ter mi je pustil osem otrok, za katere moram zdaj sama skrbeti. To ni tako enostavno. Prijeti moram za vsako delo, kakršno morem dobiti, da pošteno preživim sebe in svoje otroke.

Tako sem zadnje čase delala na farmi, kjer smo nakladali salato, katere tukajšni farmerji pridelajo ogromne množine. Po nesreči me je neki Japonec zadel s tovornim avtomobilom, pri čemur sem dobila več poškodb; najhujše pa mi je bila poškodavana desna noga, kjer mi je bila nalomljena kost. Tako sem postala naenkrat nezmožna za vsako delo. Marsikdo bi v takem položaju kar obupal. Osem otrok preživljati, pa naenkrat postati nezmožen za delo

Velika sreča v nesreči pa je, da pripadam k društvu, kakoršnih je malo v deželi, namreč k društvu Bratje Svobode, št. 162 JSKJ, v Enumclaw, Wash. Pri društvu so takoj vzeli v pretres moj položaj in sklenili, da mi morajo na vsak način nakloniti nekaj izredne podpore. Ker je bila večina članov mnenja, da bi se plesna veselica v tej sezoni ne obnesla, so sklenili prirediti domačo zabavo, katere čisti dobiček naj bi se naklonil meni v pomoč. Ta zabava se je vršila 26. julija, in že drugi dan me je obiskala skupina sobratov in sosester, namreč Matt in Matilda Petchnick, John in Mary Polajnar in Frank in Jeannette Mrzlikar. Prišli pa niso prazni, ampak izročili so mi svoto $82.70, dohodek domače zabave društva Bratje Svobode.

Manjka mi besed, da bi mogla izraziti mojo globoko hvaležnost dragim bratom in sestram, ki so se me spomnili v potrebi na tako plemenit način. Marsikatera zahvala je že bila izrečena na račun tega društva, toda gotovo nobena ni prišla iz bolj odkrite hvaležnosti kot ta moja. Vsem in vsakemu posebej, ki so k velikodušnemu daru kaj pripomogli, naj bo izrečena najprisrčnejša hvala.

Vsem rojakom in rojakinjam, ki bivajo v bližini in še niso člani društva Bratje Svobode, št. 162 JSKJ, toplo priporočam, da pristopijo, ako jim le njih zdravje in starost dopušča. Boljše Jednote kot je J. S. K. Jednota ni v Ameriki, in boljšega društva kot je društvo Bratje Svobode, št. 162 JSKJ, v Enumclaw, Wash., ni pod solncem!

S sestrskim pozdravom,
Mary Sadar,
Sumner, Wash.

Lorain, O.

Malokdaj se kaj čita v listih, kako se naši rojaki v tej naselbini zabavajo. Večinoma se zabavajo v ožjih družinskih krogih, bodisi doma, bodisi v prosti naravi. Toda, predno zimo prikima, se hočemo še enkrat vsi skupaj poveseliti.

V ta namen so se združile vsa tukajšna slovenska podporna društva za prireditev velikega piknika v nedeljo 17. avgusta. Piknik se bo vršil na Kosovi farmi. Kaj takega še ni pripetilo v Lorainu, da bi vsa društva skupaj priredila piknik.

Člani društva sv. Alojzija, št. 6 JSKJ so tem potom vljudno vabljeni, da se tega piknika udeležijo polnoštevilno. Isto bodo nedvomno storili člani drugih bratskih društev.

Ker ne maramo, da bi kdo na ta dan doma ostal, bo vozil "bus" izpred Slovenskega Narodnega Doma do prostora, kjer se bo vršil piknik.

Ker nečemo, da bi bili razočarani v slučaju slabega vremena, se bo v takem slučaju vršila zabava v S. N. Domu.

Ker želimo, da vsak odnese kak lep spomin s piknika, imamo na programu razne igre in tekme za stare in mlade.

Ker hočemo, da se bodo vsi posetniki prav domače počutili in se po domače zabavali, najemo samo slovenske godce.

Ker nečemo, da bi kdo omagal, bodo na pikniku zaloge najrazličnejših okrepčil.

Ker ne maramo, da bi kdo proti svoji volji tam ostal, bo "bus" posetnike piknika vozil zopet nazaj v mesto.

Torej, rojaki iz Lorraina in okolice, da se vidimo v velikem številu na Kosovi farmi v nedeljo 17. avgusta!

Člane društva št. 6 JSKJ toplo potom obveščam, da bomo v nedeljo 17. avgusta radi piknika združenih slovenskih podpornih društev pričeli s sejo nekoliko bolj zgodaj kot po navadi. Asesment pa se bo začel pobirati že o polu dvanajstih dopoldne, tako, da bo vsem članom

(Dalje na 5. strani)

NEW ERA SUPPLEMENT

Edited by Louis M. Kolar.

Current Thought.

S. S. C. U. ATHLETIC BOARD CONFERENCE

At the last semi-annual meeting of the S. S. C. U. Supreme Executive Board, held in Ely, Minn., during the week of July 14, it was decided to place confidence in the younger members of our Union and see what results could be obtained from them. Following the suggestion given by the writer to have representatives of various lodges maintaining athletic teams meet and discuss plans for the future, Anton Zbasnik, our supreme president, strongly recommended such a procedure, after which the athletic conference was sanctioned by the Supreme Board.

Three candidates from each lodge active in athletics are to be submitted to the athletic commissioner, out of which one member is to be chosen by him to serve as a delegate at this conference representing his lodge. Letters requesting such action have already been mailed to the various lodges, some of which have already brought the matter before the members and passed upon the request.

Cleveland, O., has been set as the place for the meeting, while the date will be published in the next edition.

For Regular Schedules

A number of athletic teams have been organized and maintained by S. S. C. U. lodges this year, and for that reason it was deemed necessary to make plans for the year 1931, whereby a schedule could be formed with some degree of regularity. At present inter-lodge activities have been arranged with some success, in which various teams of near-by cities could hold games. But obstacles were met when teams from distant cities were arranged for contests, and for the present these had to be dropped entirely.

By having various representatives of active lodges meet and thrash out ideas, a schedule could be formed, whereby teams of neighboring cities could play games regularly, and games arranged in such a way that games could be scheduled with teams from distant cities. The athletic commissioner has done his utmost to arrange more inter-lodge games by correspondence, but was unsuccessful in many instances. However, by planning contests well in the future, by means of an athletic conference, it will be an easier task.

Inter-lodge contests will be just one of the many things discussed and passed upon at this meeting. At the present time a set of rules govern the athletic movement of the S. S. C. U. which perhaps will need revision. Prizes for section champions and national champions will also be thrashed out. In the next edition the writer will discuss further the forthcoming conference.

National Star News

Conemaugh, Pa.—In a game played recently, the National Star Lodge (No. 213, SSCU) baseball team was defeated by the fast Windber Mine 37, at Windber, by a score of 7 to 0. Louis Kopler and myself (Jos. Kopler) delivered for the losers while Troyan was at the receiving end. Steitz and Geistfired the heavy artillery for the winners.

This defeat was accounted partly to the absence of regular players on the National Star team, substitutes being put in, some of which were residents of Windber. Only Steve Troyan, Louis and myself (Jos. Kopler), Dolence and Skeets showed up for the game, and rather than forfeit the game, the players were solicited from the spectators and included in the line-up. The field was on a hillside, causing much trouble to the players.

The fast Windber PNA canceled one of the scheduled games recently, which will enable us to get plenty of rest for the coming Sunday afternoon contest with the strong Highland Eagles in a double-header at Highland Park.

Thomas Gives Wiener Roast

Tony Thomas, brother member from Morrellville, gave a wiener roast at his folks' home-farm in Lanneryville for the National Star Lodge members and their friends. The purpose of the gala affair was to advertise the lodge and strengthen the campaign for new members. About 70 people were present, making merry, singing and feasting. The affair lasted from 8:30 p. m. until the early hours of the morning.

And did our secretary, Ella Mae, and Margaret Kopler show, and say something new in wearing apparel? I'll say they did. I thought they were pajamas at first, but upon closer observation noticed that they were overalls. Believe me, the girls certainly looked keen and neat. Thomas wore out two pairs of shoes running to and fro with the hot dogs; so fresh and delicious were the puppies that you could almost hear them bark. Cy Rovansek and his artistic physique was a treat for sore eyes.

Well, the whole gang had a good time, one that will linger long in their memory. In behalf of the National Star members I wish to thank Bro. Thomas for the splendid entertainment.

Picnic

Brothers and sisters, do not forget the combined picnic between the National Star Lodge (SSCU) and the Friendly City Lodge (SNPJ) a tBon Air, Pa., Aug. 24. A number of sport events will feature this affair, such as tug-o'-war, baseball game, etc. Dancing will take place in the evening at the Slovenian National Home at Bon Air. Bring your pals, sweethearts, friends, and show them that Bon Air is the ideal picnic ground. Bon in French means good, together with air it indicates that the place has plenty of good air.

More Should Attend Meetings

Our monthly meetings should be attended by more members, as it is conducted entirely for the individual's benefit. Brothers and sisters, are you enthusiastic at your lodge meetings? If not, the activities should stir you to accomplish greater things for your lodge. Personally, I believe that if the members would take more interest in ideas submitted by the fellow-members the National Star Lodge would make greater progress than it has heretofore.

Hence, brothers and sisters, let us get ourselves combined solidly, hatch out ideas and propound them to the members at the meetings. Philosophers claim that "every part of the body, every call in the brain functions much better under the impetus of contented thought." This is the foundation for any achievement.

Jos. Kopler, Pres.

George Washingtons Lose, 8 to 1

Reported by F. Jaklich (Lefty)

Cleveland, O.—Although a strong fighting spirit was maintained by the George Washington Lodge (No. 180, SSCU) indoor team, still the tide was too strong against them in the opening game of the elimination series with the Loyalites (SNPJ), final score being 8 to 1. Game was played Monday, Aug. 4, at White City Field, and was the first one to be played in the Inter-Lodge elimination series.

Frank Hocevar, playing left field for the G. W.'s, performed well at the position, making some nice catches, while Joe Jarc, manager and pitcher, performed well at bat, getting a single and a home run.

Both teams put their hearts and souls into the game, showing plenty of determination to win in the Inter-Lodge League race. However, the G. W.'s haven't given up hope by any means and will have plenty of determination in the next game played.

Come on, Jarc, we are all with you and your boys. You've got plenty of good baseball in you that was displayed in many games. Buck up, boys, and show that you can stage a comeback. What do you say, Jarc, old pal. The Follower wants you to show the others up, so don't fail him. Atta boy!

Below are the scores:

Washingtons	AB	H	R
Hren, ss	2	0	0
Bizil, c	3	0	0
Pate, 1b	3	0	0
Kromar, 3b	3	0	0
Jarc, p	3	2	1
Brezovar, lf	3	0	0
Hocevar, rf	3	1	0
Marincic, cf	3	1	0
Vesel, 2b	3	1	0
Glavan, rs	1	0	0
Merhar, rs	1	0	0
Totals	27	5	1
Loyalites	**AB**	**H**	**R**
F. Kuhel, lf	4	1	0
Pecjak, rf	5	4	1
J. Grybowski, rs	5	1	1
H. Grybowski, c	4	2	1
M. Sodja, p	3	0	0
Murphy, cf	4	3	3
Pekol, 2b	3	1	0
L. Sodja, 1b	3	2	1
A. Kuhel, 3b	4	0	0
J. Kuhel, ss	4	2	1
Totals	39	16	8

Home run—Joe Jarc. Struck out—By Jarc 5, by M. Sodja 14. Bases on balls—Off Jarc 4, off M. Sodja 1. Double play—Hren to Pate to Bizil. Game called in the eighth inning on account of darkness.

Notice, Collinwood Boosters

Hey, Collinwood Boosters, the Follower wants to know what Krall and Laurich meant by "turpentine" during the George Washingtons-Collinwood Boosters game played July 23. The Follower would like to have some for his tonsils, as they are dry. Must you go to Chicago and get it? Hooray for half-pint and Laurich!

Frank (Lefty) Jaklich.

BRIEFS

JUBILEERS is the name of the latest English-conducted lodge, No. 215, to be added to the S. S. C. U.; it is situated in Chisholm, Minn. John Vessel is president.

JOHN CERNE JR. of Lorain, O., visited the New Era office last week to discuss the coming athletic board conference to be held in Cleveland, O., on Sept. 12 and 13. Mr. Cerne Jr. is secretary of St. Aloysius Lodge, No. 6.

AT THE AGE of 19, Leon H. Vestal of Colorado Springs, Colo., has received a Limited Commercial Pilot license. He attended the aviation school of Pikes Peak Air Commerce Inc.

S. S. C. U. Athletic Board conference sanctioned by the Supreme Board at its semi-annual meeting will take place on Sept. 12 and 13 at Cleveland, O. Each representative will be notified by letter.

JOE KUHEL, the Slovenian $65,000 baseball player recently purchased by the Washington Senators of the American League, is living up to his reputation as a classy first baseman with his timely hitting and good fielding.

SPORTS DANCE will be given by the George Washington Lodge (No. 180, SSCU) of Cleveland, O., on Saturday evening, Sept. 13, which will cap the climax of the S. S. C. U Athletic Board conference.

COLLINWOOD BOOSTERS LODGE (No. 188, SSCU) indoor baseball team took the long count of a 6-to-3 score from the Comrades (SNPJ) team in the second game of the Inter-Lodge League elimination series played Monday, Aug. 11.

BEGINNING with this week, the American Home Junior of Cleveland, O., that appears weekly in connection with the American Home newspaper, Slovenian daily, will have two pages in English, devoted entirely to the young Slovenes. Mr. Ray J. Grdina is editor.

A NUMBER of contributing articles were left over for next week's edition for lack of space. The semi-annual report practically took all of the available space in last week's edition, and for that reason space will not permit the publication of all the contributing articles in this issue. However, all articles that have been submitted will appear in the following week's edition.

Inter-Lodge Picnic

Something out of the ordinary will be held Aug. 17 on Kus' farm. All the Slovenian benefit lodges of Lorain will hold a large picnic.

All kinds of entertainment will take place, for everyone to enjoy, old as well as the young folk.

Come on! Everybody be present, don't have any other "date" for the 17th, for if you stay away from this picnic, you will miss a lot of fun.

Machines will carry people to the picnic from the Slovenian National Home, so you won't have to walk down. In case the weather is bad, this entertainment will be held at the Slovenian Home.

So, once more, I welcome everyone, for it is the duty of all to attend who belong to at least one of the lodges which are giving the picnic. Visitors from other towns are also welcome.

Yours for a better time,
Martha Kumse,
No. 6, SSCU.

Boosters Win Again

Krall Allows Three Hits for Third Victory

Presidents of lodges are supposed to know parliamentary law in its fullest detail, and to be able to conduct meetings in such a way that will liven up interest. But along comes Mike Krall, president of the Collinwood Boosters Lodge (No. 188, SSCU), and pitches a three-hit game against the Comrades (SNPJ), his team winning by a score of 5 to 1, in the Inter-Lodge League tilt of Cleveland, O., played Monday, July 29.

Three double plays were made by the Boosters; in the second inning Kozlevcar, playing second base, made one unassisted; in the sixth inning Kuhar started the ball rolling to Kozlevcar, who threw to Berzin for the second; in the seventh inning Mihelcic, playing third base, picked up a grounder and threw to Kozlevcar, who threw to first for the third double play. Baraga, playing short center, displayed marked ability to judge the ball, having bagged something like eight flies, while Stulic, playing the left field position, made a number of hard running catches.

Adolphe Tekautz made a run for the Comrades, it being the only run scored. Zaletel pitched for the opponents and was nicked for 14 hits.

Boosters have taken three games in a row — Spartans (SSPZ), George Washingtons (SSCU) and Comrades (SNPJ) being the victims. Manager John Koren of the Collinwood Boosters caught a nice game behind the plate and also is responsible for the Boosters' good showing in indoor baseball.

Lose Close Game

In the elimination series conducted by the Inter-Lodge League of Cleveland, O., Collinwood Boosters (SSCU) lost a closely contested game with the Pioneers (CFU) last Friday, Aug. 8. Mike Krall pitched a good game, forcing the opposition to hit into easy outs. Errors contributed the two runs. P. J. Mihelcic made a number of good catches at third base, forcing the runners at first base. Berzin hovered like a giant, stretching himself to scoop the ball at first.

Both pitchers were hit freely, but received good support on the part of the teammates. Barberic, pitching for the Pioneers, had the batters guessing by his continuous nod of the head for a change of signal from the catcher.

Classes to Reopen

Cleveland (O.) Sokols have resumed classes in calisthenics beginning with last Monday, Aug. 11. Girls' classes are held on Monday and Thursday evenings, while the young boys' class is held on Friday evening at the St. Clair Bathhouse. No charge is made for attendance.

The money in circulation is between $38 and $40 per capita at the present time.

SPORTING BITS

New English-Conducted Lodge Organized

Jubileers, Name of New Group, Has Baseball Team Organized in Chisholm, Minn.

It takes some lodges a long time before they even venture in athletics. But here comes the latest English-conducted lodge with a baseball team already organized. They call themselves Jubileers, Lodge No. 215, SSCU, of Chisholm, Minn.

Such spirit is commendable indeed, and it is hoped that the Jubileers will liven things up for the S. S. C. U. out in Chisholm, Minn., and vicinity. Anton Vessel, president, is confident that the membership will increase considerably as time goes by, and judging by the letter received from him one is given the impression that he and the members of the Lodge Jubileers are full of enthusiasm. Frank Centa Jr. is secretary and Joe Monti is treasurer.

In a game played recently with the K. S. K. J. lodge team, the Jubileers scored a victory by a score of 7 to 3. According to one of the local newspapers, the latest addition to the S. S. C. U. is rated as one of the strongest fraternal teams in Chisholm. What is more, the Jubileers are not content with participating only in baseball, but are already forming plans for a basketball team and are actively engaging themselves for other sports approved by our Union.

Some of the stagnant English-conducted lodges could take a lesson or two and profit by this example. By engaging in sports a lodge becomes active, full of pep and initiative. Sports have a tendency to improve the general status of any lodge.

Trounce S. N. P. J.'s, 10 to 2

Korenin, Pabst and Kaires Star

Waukegan, Ill. — Comrades Lodge baseball team won its sixth consecutive game Sunday, July 27, by virtue of a victory over the strong S. N. P. J. Snaps by a score of 10 to 2.

Charley Bick allowed the losers but three safe hits up until the sixth inning. He somewhat eased up in the latter part of the game, allowing two runs to score.

"Biff" Korenin led the hitting for the winners with three safe bingles in five trips to the plate.

Brilliant fielding at short by Charley (The Great) Pabst was the feature of the game. Charley (The Great) can cover more ground on a ball diamond than a circus tent, and he plays ball like nobody's business.

Wally Kaires played his ninth consecutive game at second base without an error. He has a fielding average of 1.000 and at the present time is batting at a .350 clip.

As a consequence of the present winning streak, the Comrades are looked upon as a strong aggregation and are expected to play a leading role in the Lake County elimination tournament to be held here in the latter part of August.

Sunday (Aug. 10) the Comrades' baseball team went to Lake Forest, Ill., for a tussle with the strong Y. M. C. A. outfit, and on Wednesday (Aug. 13) the Comrades will meet the Sailors at the Great Lakes Naval Training Station.

Sidewalks of the Comrades Lodge

Mary "Darling" Rode, a resident of North Chicago, Ill., is employed at the American Lakes Paper Mill. She is the popular recording secretary of the Comrades Lodge and a very active member.

She is better known around this part of the country as Our Darling Mary, and sometimes called the second Clara Bow, no kiddin', folks, she has It, you should see her. OH, she's so lovely.

"Darling" Mary is very sentimental; and how. She just adores riding in a tipsy canoe on a blue lagoon (not alone, of course), and she loves to sit out the dances and gaze at the moon, and watch the stars twinkle in the sky. OH, "Darling," ain't love grand!

Girls Want Games

Athletic activities in the state of Minnesota have not been prominent in the past, and something should be done in the immediate future to help liven interest among the younger S. S. C. U. members. Rose Svetich, manager of Basketeers, belonging to Lodge No. 120, Ely, Minn., contends that no S. S. C. U. lodge opposition can be had for the girls' basketball team.

The athletic commissioner will do his very best to secure games for them in the fall, but it must be understood that no other S. S. C. U. lodge maintains a basketball team in the immediate vicinity. It would be practically impossible to arrange a contest with the George Washingtons girls' basketball team, Lodge No. 180, of Cleveland, O., because of the enormous transportation expenses involved.

A suggestion is offered to the Basketeers to submit articles to the New Era Supplement and thus help enliven interest in sports among S. S. C. U. lodges of Ely and vicinity. The writer's wholehearted co-operation is assured to Rose Svetich and the other members of the Basketeers.

Come One, Come All

Have you heard the latest news? This is it: Betsy Ross Lodge (No. 186, SSCU), the shy little violet, is giving a picnic and is assuring everyone a good time. The place is to be on some mysterious farm of no name. Sounds romantic, doesn't it?

Everybody is invited. Friends, enemies, pals, etc. Boys, put on your white pants, and girls, put on your knickers and meet us at the corner of Mandel's drug store, at E. 157th St. and Waterloo Rd., Cleveland, O. Bring along as many cars as possible and join the group. Also pack up a lunch and spend the day on the farm.

We will try and have banners for the machines if possible. Everything will be hotsy-totsy. The date is Aug. 17. Meet the gang at Mandel's drug store at 8:30 a. m. Sunday morning. Bring your camera and films. Don't forget, the affair is sponsored by the Betsy Ross Lodge, No. 186, SSCU.

Anna Vidmar, Sec'y.

(Watch this column—You may be next.)

John Petrovic,
No. 193, SSCU.

MLADINSKI ODDELEK -- JUVENILE DEPARTMENT

OD PASTIRICE DO CESARICE

Živel je nekoč car, ki je imel pred svojim dvorom velik kamen. Pa pade carju lepega dne v glavo in da razglasiti po vsej ruski državi:

"Kdor mi zakolje kamen pred dvorom, ga postavim za svojega prvega dvorjanika."

Od vseh strani so prišli pogumni in močni fantje, toda kamna ni mogel nihče zaklati. Sploh so se jako čudili, kako meni car, da bi se dal mrtvi trdi kamen zaklati.

V neki daljni vasi pa je živela pogumna in bistra pastirica. Ko je čula carjev razglas, se je preoblekla v fanta in se podala pred carja, rekoč:

"Svitli car, jaz bom skušala kamen zaklati."

Hitro se je razširila novica, da se je vendar našel mladenič, ki se bo z nožem lotil kamna in zbralo se je mnogo radovednih ljudi.

Vpričo množice in carja ter njegovih dvorjanikov potegne pastirica, preoblečena v fanta, nož izza pasa in začne kamen klati kakor jagnje. Pa seveda ni šlo in ni bilo krvi in tedaj se pastirica obrne k carju:

"O, svitli moj car, ti bi rad, da ti kamen zakoljem? Dobro, toda: kar ne živi, se tudi ubiti ne da. Vdihni ti najprej temu kamnu življenje, pa če ga nato ne zakoljem, mi lahko odrežeš glavo!"

Car se je začudil nad tem umnim odgovorom in dejal:

"Ti si najpametnejši fant v moji državi, postavil te bom za svojega ministra ali dvornika. Toda tole moraš prej storiti: Čez tri dni se mi iz domače vasi zopet vrni semkaj. Moraš prijahati, pa tudi ne jahati! Prinesi mi darilo, pa ga tudi ne prinesi! Vsi mi, mali in veliki, ti pridemo naproti, da te sprejmemo, a ti moraš to tako izvesti, da te bomo sprejeli, a da te ob enem ne bomo sprejeli."

Pastirica se vrne v domačo vas in veli očetu, naj ji ulovi dva zajca in dva goloba. Tretjega dne zarana je spravila zajca v vrečo in jo izročila očetu:

"Greva k carju in ko ti bom velela, izpusti zajca iz vreče."

Sama pa je vzela v roke oba goloba, se narobe vsedla na nizkega oslička ter z očetom krenila v mesto, kamor pa je naprej poslala nekega hlapca, da javi carju njen prihod.

Car je stal s svojim številnim spremstvom pred dvorom, ko se približa devojka. Zopet preoblečena v fanta je na oslićku narobe sedeča jezdila tako, da se je z nogami lahko dotikala zemlje in jih premikala kakor bi hodila. Očetu je tedaj velela, naj iz vreče izpusti oba zajca, ki sta se pognala v dir, dvorjaniki pa za njima, da je car pred gradom ostal skoro sam.

Pastirica stopi predenj, mu pokloni oba goloba, a ko ju je hotel car prijeti, ju je pastirica izpustila, da sta odfrčala v zrak. Tedaj pravi pastirica:

"Vidiš, car, tvoji ljudje so me sprejeli, pa me tudi niso sprejeli, ker so se razbežali za zajcema. Jezdila sem in nisem jezdila. Prinesla sem ti darilo, pa ga tudi nisem prinesla."

Car je bil ves osupnjen in je dejal: "Odslej te bom smatral za svojega sina."

Pastirica pa mu je šepnila na uho: "Nisem fant, marveč dekle."

"Nič za to," je dejal car, "boš pa moja žena."

Z velikimi svečanostmi se je čez nekaj tednov vršila poroka carja z bistro pastirico. ("Mlado Jutro")

BABA JAGA

Živel je starec, ki je imel lepo hčerko. Imenovala se je Vera. Ker mu je umrla žena, se je kljub svojim letom znova poročil. Z dnevom, ko je prišla v hišo mačeha, se je začelo za ubogo punčko trdo življenje; zlobna žena ni bila nikoli zadovoljna, nič ji ni ugajalo.

Nekega dne, ko je bil mož odsoten, pokliče pastorko in ji reče:

"Pojdi k tetici, moji sestri in jo prosi, naj ti da iglo in nit. Sešiti si moraš srajčko."

Sestra, o kateri je mačeha govorila, ni bila druga kakor Baba-Jaga, s koščeno nogo. Verico je bilo strah; kako se bo drznila stopiti pred to žensko?

Najprej se odloči obiskati svojo pravo tetko, sestro rajne mamice.

"Kaj želiš, moj otrok?" jo vpraša tetka, ko jo zagleda pred seboj.

"Moja mačeha me pošilja k svoji sestri po iglo in nit, da si naredim srajčko; toda zelo se bojim. Kajne, to je tista, ki jo imenujejo Baba-Jaga?"

"Da, toda poslušaj nečakinja, kaj boš tam storila: tam je breza, ki ti bo bičala obraz s svojimi vejami, toda ti jih priveži s trakom; vežna vrata bodo škripala in se zapirala pred teboj s hruščem, ti pa nalij v stežaj olja; psu, ki se bo zaganjal vate, vrzi kruha, in mački, ki ti bo hotela izpraskati oči, daj pečenke."

Deklica se poslovi od tetke in odide. Pride pred kočo, kjer Baba-Jaga sedeč na stolčku tke platno.

"Dober dan, tetka!" pozdravi deklica.

"Dober dan, moj otrok, kaj je novega?"

"Mamica me je poslala, da te prosim za šivanko in nit, ker si moram sešiti srajčko."

"Dobro," reče Baba-Jaga, "sedi sem in tki platno!"

Verica začne tkati; Baba-Jaga medtem odide in reče svoji služkinji:

"Zakuri kopel in skopaj mojo nečakinjo, toda umij jo dobro, ker se hočem z njo pogostiti."

Ko deklica to zasliši, se prestraši do smrti.

"Moja draga," reče deklica služkinji, "naloži kar najmanj drv in prinesi mnogo vode, toda le v situ. Tukaj imam robček, tvoj naj bo!"

Baba-Jaga je na dvorišču čakala, kdaj bo kopel gotova. Približa se k oknu in vpraša:

"Ali tkeš, Verica? Ali tkeš, moja ljubljena?"

"Tkem, tetka, tkem . . ."

Ko se je Baba-Jaga oddaljila, je Vera poklicala mačka in ji dala pečenke.

"Moj dragi, mali mucek," ga vpraša, "ali ne bi mogla uiti odtod?"

"Lahko," odgovori živalca, "tukaj imaš glavnik in rutico, vzemi ju in reši se! Baba-Jaga te bo sicer preganjala tedaj nagni uho k zemlji in poslušaj: če se ona približa, vrzi najprej rutico in pojavila se bo takoj globoka in široka reka. Kadar bo ona na drugi strani in boš v nevarnosti, da te doseže, vrzi glavnik in zrastla bo na tistem mestu tako gosta šuma, da bo težko prodreti vanjo."

Deklica je vzela glavnik in rutico ter je zbežala. Psi so se pognali za njo, da bi jo raztrgali na drobne koščke, Verica pa jim je vrgla kruha. Vežna vrata so se hrupno zaprla in ji zagradila pot, toda deklica je nalila v tečaje olja in zopet so se odprla na stežaj. Zunaj ji je breza opraskala obraz s svojimi dolgimi vejami; deklica je vzela trak, zvezala veje in breza jo je pustila oditi. Deklica je začela teči.

Medtem je mačka, sedeča pred statvami začela tkati ;toda veliko bolj se ji je posrečilo zamotati nitke, kakor pa napredovati z delom. Baba-Jaga se približa k oknu in vpraša:

"Ali tkeš, Verica?"

"Tkem, draga tetka!" je odgovori mucka.

Tedaj se baba požene v kočo in opazi mačko; mala, glej, je izginila. Tako!

Baba-Jaga začne obdelovati mačko, očitajoč ji, da otroku ni izpraskala oči.

"Glej, toliko let je že, kar ti služim," odgovori muca, "toda niti enkrat mi nisi dala koščice. Mala, dobra deklica pa mi je dala celo pečenke."

Baba-Jaga se loti psov, vrat in breze, jih psuje in bije služkinjo.

"Toliko let je, kar ti služimo," je rečejo psi, "ali si nam dala kdaj vsaj suho skorjico? Mala pa nam je dala kruha!"

"Glej, toliko časa ti že služimo," ji očitajo vrata, "nikoli nisi omočila mojih stežajev drugače kakor z vodo Deklica je vanje nalila olja!"

"Dosti let ti služim," očita breza, "toda nikoli nisi povezala mojih vej vsaj z nitko. Mala jih je privezala s trakom!"

"Ali ni preteklo dovolj časa, odkar sem v tvoji službi," ji reče služkinja, "toda nikoli mi nisi dala niti kake strgane cunje. Plemenita mala Verica mi je podala robček."

Baba-Jaga se hitro vsede v svoj možnar, s tolkačem se dvigne od tal ter pobriše z metlo vsako sled za seboj.

Ko deklica nagne uho k zemlji in čuje, da jo hudobna teta zasleduje, vrže rutico in na mestu se takoj pojavi velika in globoka reka.

Baba-Jaga dospe na breg reke: od besa začne škripati z zobmi. Takoj se vrne domov in privede svoje vole, ki izpijejo vso vodo iz reke, in zopet začne preganjati svojo nečakinjo.

Ko Verica začuti, da jo teta dohiteva, vrže glavnik. V tem hipu zraste šuma tako gosta, da Baba-Jaga ne more priti skozi njo in se naveliča še dalje loviti otroka.

Med tem časom je prišel oče domov in vprašal, kam je odšla hčerkica.

"Šla je k svoji teti po iglo in nit," odgovori žena.

Kmalu nato se vrne mala, zasopla Verica. Očetu mora odgovarjati in mu pove, kako jo je Baba-Jaga hotela pojesti.

"Kako si torej rešila?" jo vpraša oče.

Deklica mu vse razloži. In ko izve, da mu je njegova lastna žena hotela pogubiti otroka, ga popade tako strašna jeza, da spodi zlobno mačeho.

Odtlej je živel srečno s svojo Verico.

("Mlado Jutro.")

BAKED CORN

When fresh corn is a little too tough to be nice on the ear it may be prepared this way:

Cut the corn from three large or four small ears.

With the back of the knife go over the cobs to be sure that every bit of the tender hearts are out.

Beat one egg (yellow and white together.)

Add two teaspoonsful salt.

Add two cups of milk.

And beat again till well mixed.

Add the cut off corn.

Grease a baking dish and pour in the corn mixture.

Bake 25 minutes in a moderate oven and serve at once.

A little cheese grated over the top before baking pleases some folks, and makes a testy crust.

Ježek:

NA POČITNICAH

Zdaj so za nami
kriči in šolske težave—
solnce že zgodaj nas drami
k vodi in v senčne dobrave.

Zdaj se krepimo —
čas tako hitro poteka . . .
Zdaj le kar pridno praznimo
latvice kislega mleka! . . .

Črnega kruha,
štrukljev, medu in pogače—
jejmo, kar mama nakuha
dobre in sočne jedače!

Pa ven v naravo!
Mnogo svobode užijmo—
rastimo, rastimo zdravo,
solnčnih se žarkov napijmo!

ALIBI IKE

When you go to a summer camp and say you can swim out to the raft and then don't, or say you are a fast runner and then let everybody beat you on the first race, or say you are a champion cricket player and then get bowled out without bringing in a run, the other fellows will think that you are telling lies.

That's bad, and the best thing to do is to stop it, and start all over again, admitting just what you can do and no more. But Ike didn't know this.

"Thought you said you could swim out to the raft?" asked Dick Dodge, who was the leader of our tent.

"I could, if it was salt water instead of fresh," answered Ike. "Salt water is easier to swim in then fresh."

That was Ike's excuse about the swimming. Then, when we found out he couldn't run, we asked him what the trouble was then.

"The air," he said. "It's too thin up in this mountain country. I'm used to the sea air near the ocean."

And when he got bowled out at cricket he said he couldn't see how anybody could play it right without a real cricket bat instead of an ordinary baseball bat. So because he always tried to lay the blame on something else and not on himself, and because that kind of an excuse is called an alibi, Ike got the name of Alibi Ike.

It was too bad, too, because Ike wanted to stay at the camp for the last week; and it didn't look as though he'd be allowed to stay.

"Why not?" Ike queried.

"Because it's only for the fellows who are good athletes," explained Dick, trying to tell Ike in a nice way. But Ike wouldn't be told.

"Don't you call me an athlete!" he demanded. "I can swim, run, jump, play cricket and play baseball. Doesn't that make me all right?"

"Oh?" was Dick's reply, trying to get off the subject. "So you play baseball, too?"

"Sure," answered Ike, expanding his chest and looking important.

"What position do you play?"

"Any position, but I'm best at pitching."

"How good are you?" Dick asked.

"Well," replied Ike, "to tell the truth, I once pitched a no-hit, no-run game against fellows who were twice my size, and so at home they call me the Champion Pitcher!"

"If that's the case," said Dick, "you'll play in the big game this afternoon. Tent Two needs a man like you."

This surprised everybody to hear Dick say this, but he explained himself later.

"I'm going to try to convince him that he isn't as good an athlete as he thinks he is. This afternoon, he'll pitch for Tent Two, but instead of playing against the members of Tent Three's team, he will play against a picked team of the nine heaviest hitters in the camp!"

"Gosh!" exclaimed Clicker Johnson. "You mean Ted, Ernie, Walt, Tony and the rest of the sluggers?"

"Yes," replied Dick.

"How long do you expect the game to last?"

"It might last all afternoon," said Dick. "But I don't think it will run more than one inning. We'll give Ike's team the first raps, and then the second half will see the nine sluggers making about two hundred home runs. At least, if Ike is the kind of a pitcher that he is a swimmer and a runner."

That afternoon, Tent Two had their raps, and since it was all made up to give Ike an easy ball so that he could make a hit and get some confidence, the pitcher for the fake Tent Three team put a nice one right over the plate. Ike swung at it and hit the ball so hard that he made a home run!

But the rest of his team was soon put out, and the heavy hitters came to bat. Before Ike threw his first ball, Dick called out to him and said:

"How's the sun, Ike? In your eyes?"

"No," answered Ike. "The sun's all right!"

"Ball hard enough?"

Ike twirled it in his fingers.

"Perfect," he said.

"Didn't hurt your arm this morning, or last night, or any time?"

"No," was the replied. "My arm never was better."

"Need warming up?"

"No. I'm ready to start right now."

"All these fellows are heavy hitters," warned Dick.

Ike looked them over and grinned.

"So I notice," he said. "But it's O. K. with me."

"Is everything else O. K.?" persisted Dick.

"Sure. Let's go."

Dick waved his hand to say that he was satisfied for the game to go on. The first batter stepped up to the plate, swinging his bat as though he was sure of a home run. Ike gave a signal to the catcher, wound up, and let the ball go. Then he looked at the umpire for his decision.

"Ball one!" said the official.

Ike didn't say a word. He wound up and let the ball go a second time.

"Ball two!" ou

Dick winked at the fellows on the bench and said, in a low tone.

"He's worse than I thought he'd be. He can't even put them over the plate."

And when Ike's third throw was called a ball, he added to the man at bat:

"Let him walk you. We'll get three men on bases, and then the fourth man up can slug out a home run!"

"Four balls! Take your base!" called the umpire after the next pitch.

The man ambled down to first base, so did the next and so did the third man. The bases were full. Then Ike seemed to tighten up on his control, and as a result he struck out the next man.

This was a big surprise to everybody; and so too, was it when the next man fanned three times and was put out. Then Dick came to the bat.

"Struke one!" called the umpire.

"Strike two!" a moment later.

"Everybody held his breath! The third ball left Ike's hand and sped toward the plate. It looked as if it was going to hit Dick in the side, and he stepped back to avoid it; but just before it reached him, the ball curved in and passed fair over the plate!

"Strike three! You're out!"

"The second inning," said Dick, passing the word along as his team went to the field. "We'll do it the second inning."

But that inning was just like the first, and the third was like the second, and at the end of the game, Dick's team of nine heavy sluggers hadn't even made a hit! The score was 3 to 0 in Ike's favor.

Give Dick credit. He was the first one to shake hands with Ike and tell him what a fine pitcher he was.

"What did I tell you?" said Ike, laughing.

"But you also told us you were a good swimmer!" protested Dick.

"Well, I am," insisted Ike. "I've got to get used to fresh water, that's all."

"That's just an alibi, isn't it?" asked Dick. "Come on, Ike, tell the truth."

Ike shook his head.

"No," he answered. "It isn't an Alibi. I made a resolution once never to give an alibi."

"Do you always keep your resolutions?" queried Dick.

"Sure," answered Ike. "Once I decided I'd get up at 5 o'clock one morning and run ten miles before breakfast."

"And did you do it?"

"No," answered Ike, unexpectedly. "You see, my mother forgot to awaken me."

But just the same, he stayed at the camp for the fifth week, and at the end was voted the best athlete who had ever attended the camp. As Dick Dodge said afterward, you can never tell where a fellow like Ike is telling the truth or giving an alibi, and the best thing to do is never to judge a fellow until you have found out for sure what he can or can't do.

Ike Wound Up And Let The Ball Go

THE HANDY BOY AT HOME

By C. A. King, State Normal School, Plymouth, N. H.

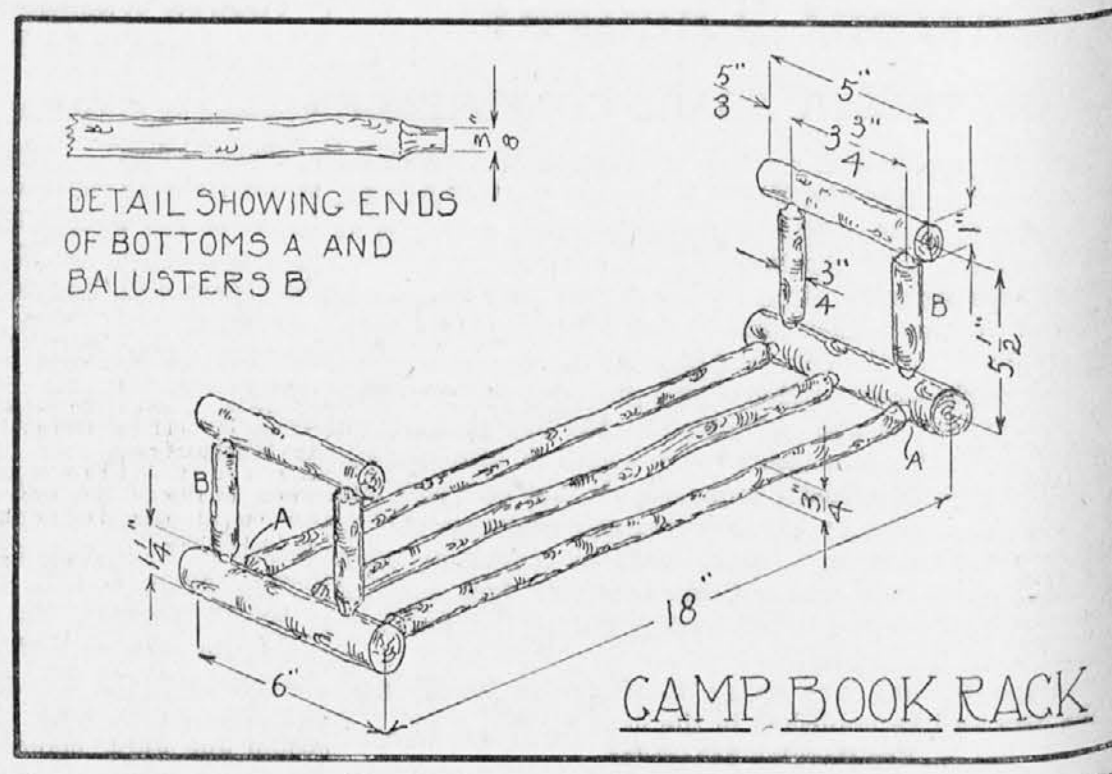

Often the "Handy Boy" at the family camp is conscious of the urge to do something with his hands, for there are times when time hangs heavily even at camp. If there is a growth of young birch at hand, or better, if ready cut and seasoned under cover birch is available this book rack will be an excellent project for it needs only a saw, a ⅝" bit and bit brace and a jack knife.

Get out two bottom ends 1¼" x 6", two top ends 1" x 5", three bottoms A ¾" x 18½" and four balusters B ¾" x 5¾"; the pieces A should be straight and as nearly as possible the same size their entire length. Bore ⅝" holes ⅝" deep in the top and bottom ends to receive the balusters, 3¾" between centers; also three ⅜" holes in each bottom ¾" deep, one in the center and the other ¾" from each end. Cut the dowel on each end as shown in the details, making it of correct diameter as far as it is to enter the wood. Be sure that the holes line up properly or there will be trouble in assembling the pieces and the finished work will be likely to have a twist that will be embarrassing to explain.

Assemble with glue which should be put in the holes rather sparingly or it will squeeze out and make a messy looking joint. While glue is to be fastened together with nails. To add a spot of color, paint the ends wood of the ends a bright red or green.

A JAPANESE FOLK STORY

Among the many things in Japan that seem queer to travelers from our land are the pure white hares with coal black ears. Travelers are prone to wonder about them. Just so the little Japanese boys and girls have always wondered about these strange hares and when they ask their mothers the question: "Why are the hare's ears black?" Mother answers them with the same tale that is told to the inquiring stranger.

Long, long ago in a big white house on the top of a beautiful hill lived six beautiful white little rabbits. They were always as white as the snow and as soft as down in appearance, but their manners were not soft and their voices were harsh, for they were always quarreling and fretting among themselves and consequently they were never happy. Now, one of the chief reasons for their quarreling was that they could not agree where they had lived before they came to the big house on the hill. Not that it really made any difference, but it was a constant source of worry and irritation. Each of the six had his own idea of their former home and as each of the six was sure he was right the quarreling never ceased.

One day as the disputing was louder than ever the king of the animals came to them to put an end to it. "You bad little things," he said. "You wicked, noisy little animals. You don't know when you are well off. I will tell you where you came from. Where you lived before you came to the big house on the hill. High up in the heavens, behind the stars, the sky children were having a snowflake fight one day. Some of the white snowflakes fell from the sky down to the earth. Down, down they came between the branches of the trees till they came to rest on the green earth. Such pretty white snowflakes they were. Surely they must be turned to some good thing and so they were changed into white hares, soft and downy as the snow from which they were made. You are those little hares and if you were good, you could always be white. But you are not good. You are noisy and quarrelsome. What are you making such a fuss about now?" And without waiting for the hares to answer him the big king bear caught up a stick from a fire burning near by and whipped each of the six hares in turn until their ears were as black as coal.

The hares were so frightened that they uttered never a word but scurried away into the woods to make a new home for themselves where they could not so easily be found. Now the g r e a t-great-great-great-great-o, ever so many greats—grandchildren of these little hares are still living in the woods in Japan and when you travel to Japan if you should see one you may be sure that he is one of this same family whose ears were blackened by the charred stick with which they were beaten.

The Big King Bear Caught Up A Stick And Whipped Each Of The Six Hares In Turn

FLYING DREAM

Last night I dreamed of flying,
Of flying through the air;
I flew all night I'm certain,
But cannot tell you where.
I wasn't in an airplane,
Nor in a big balloon,
But all the while kept going
Right toward the great round moon.

I hadn't wings like Angels,
Yet sailed so very high
That larger and still larger
The moon looked in the sky.
But just as I, I reckon,
Was nearly scared to death
I floated down so quickly
I almost lost my breath.

Still flying, then I hovered
Above a lovely place,
Whose castle walls and towers
And gardens I could trace.
And silvery streams and meadows,
All in the moon's clear light,
Gleamed softly down below me
As I flew on last night.
Oh, have you dreamed of flying,
It's just the greatest fun!
I flew till it was morning,
Flew right into the sun.
Of course that woke me, yelling,
And what was my surprise
To find the sun was 'way up
And shining in my eyes.

Dj. Vargazon:

MLINAR

Pod vrbo mlinar melje
pšenice in rži—
na vozu moko pelje
po cesti sred vasi.

"Kako je lepa bela!"
se čudi stric kovač;
"sestrica bo vesela,
ko speče ti kolač."

A mlinar nič ne reče,
le tiho se smehlja—
domov po cesti teče,
z nogami topota.

Do hiše spe ob plotu,
sestrica vzklikne: "Joj!—
razsul si vse po potu,
nesrečni mlinar moj!"

D. Vargazon:

TELIČEK

Na vejici ptiček
prelepo žgoli,
po trati teliček
se z ovčko podi.

Od sreče neznane
veselo skaklja—
upehan obstane,
pred kupom sena.

A ptiček svari ga:
"Pastir se je skril,
seno zdaj privzdigni—
teliček, čiv, čiv."

In kup se razgrne,
pastirju gre vsmeh;
prestrašen se zvrne
teliček po tleh.

MLADINSKI DOPISI

Contribution from Our Junior Members

JEALOUSY

In the Palace Garden of Austria in 1735, Princess Anne was talking to her beloved, Duke Florian. Both were sitting among the flowers.

"I swear by God that you are the most beautiful lady that I have seen my eyes on. Brown eyes, brown hair, fine shaped lips, a lovely figure and—"

"Oh, you flatter me, Florian," the Princess, with hands clasped interrupted. "My lord duke, 'tis you who are beautiful."

"Honest, dear, it makes me jealous to see you with other men and tonight I'll kill you." ' The duke [illegible]gers his sword while poor Anne weeps. As the knife falls into her heart, Anne's brother confront the duke.

"You fool!" he cries, " why did you kill her?"

Without a word Duke Florian stabs himself to be with Anne in another world.

Elizabeth Peterne[illegible]
No. 2. S. S. C.

A MIDNIGHT VISITOR

One night I was reading stories about imitation burglars. It was 9 when I was finished with the story I was tired and sleepy, so I decided to go to bed.

Soon I heard footsteps coming up the stairs. I became frightened but poked my younger sister. The [illegible] paid no attention to me. The [illegible] came nearer and nearer, till at last I could be at it no more; I prepared for the worst. I had a chance to see the figure, which was clad all in white. I hid behind the door, the figure came into my room, sat down on a chair and opened a paper and started to read aloud. I sneezed so hard, that the figure became frightened, took one last look around the room and went out of the room into the room where my mother was asleep. The figure dashed on the bed and fell asleep.

I heard nothing more of it until morning. The following morning I heard my mother telling about some one walking in the night that came into and on her bed. Then it came into my mind that my sister always has a nightmare. So now I know that she was the one that frightened me. I'll never forget it, some day I'll pay her back.

I mustn't forget to thank you for the one-dollar check I received. It sure was a treat to me.

[illegible] Janezich
No. [illegible] S. C.

CONVERSATION AMONG THE PINS

Mrs. Goldpin and Mrs. Silverpin lived in a blue satin cushion that was trimmed with dainty white lace and had a gay little bow at each end. The two ladies were so proud to think that the blue cushion was theirs [illegible] them on purpose, that when the Brasspins came to live there, they didn't like it at all.

"Really,' complained Mrs. Goldpin, "I should think they would know better than to come here."

"It is too bad, but we will not speak to them," said Mrs. Silverpin.

A few nights later Mrs. Goldpin said to Mrs. Silverpin: "I think we may as well make friends with the Brasspins. I met them at a party and after all they are nice people." Mrs. Silverpiin agreed and that same hour they spoke to the Brasspins.

One day the mistres came into the room and put some needles in the cushion.

The three screamed, "How [illegible] full!" said Mrs. Goldpin.

(Continued on page 5)

MLADINSKI DOPISI

Contributions from our Junior Members.

(Continued from page 4)

to live with us. Why, I have told that they work for a liv-

Silverpin answered, "I shall speak to them."

"Neither shall we," answered the Brasspins.

The needless had not heard the conversation. They saw the three ladies being very polite, so they said, "Good morning."

But Goldpin pretended she had not heard and so looked out of the window. Mrs. Silverpin looked at the ceiling and the Brasspins looked at the floor.

"Strange," said the needles, "they mean to speak to us."

So they did not speak to their neighbors again. They had such a hunt times by themselves on their top of the cushion that they never thought of their neighbors any more.

Mary Nemgar,
No. 25, S. S. C. U.

—o—

THE TOWELS PARTY

Jimmie read a story about water coming through the earth until it reached the roots of a tree that was looking for water.

"I don't believe that story. Water can't go up," said Jimmie.

The room was quieet and warm and Jimmie fel asleep. Suddenly he noticed something. What was that? Surely, the towel on the rack looked at him. Yes, winked! Jimmie looked at it all the while and slowly the end of the towel changed to a big mouth, then came a nose and then a pair of eyes. The smiling face on the towel spoke, and said: "You are a strange child. I am going to have a party and you will see how the water gets through the earth."

"What? I never heard of a towel having a party," said Jimmy.

"It is the same, I'm going to have a party. Be quiet for I hear someone coming," said the towel.

Jimmy listened and then he heard a voice from the sugar bowl on the table, saying, "Let me out. I want to go to the party."

Jimmy lifted the lid and out came a lump of sugar. After it came the saucer, holding some tea; then came an ink bottle with blotting paper following it. Jimmy was interested watching the battle when something large and soft struck his head. Looking around he saw a sponge. Then a basin of water came in and sat on the floor. Last of all, came the doughnut and the coffee pot full of coffee.

The towel than said, "Now my friends, here's a little boy that doesn't know how water gets through the earth. Show him now."

At the sugar dropped into the basin, the blotting paper into the tea, the sponge into the water and the doughnut into the coffee.

"Look here, little boy," said the tea as it crept into the sugar, as the water crept into the blotting paper, the water into the sponge and towel, the towel into the doughnut.

"Have you seen that dozens of times," said Jimmy, "I don't—."

He was then stopped by a good smell and a voice that said, "Come, wake up. Supper is ready."

Jimmy rubbed his eyes and looked around. Was it all a dream, or was it?

Frances M. Nemgar,
No. 25, S. S. C. U

—o—

EXPRESSES GRATITUDE

Anna Govednik, member of lodge 50, S. S. C. U., of Chisholm, Minn., wishes to convey her gratitude for the numerous prizes given her for her many contributing articles to the Juvenile Department. She prefers to live in Minnesota because of the many lakes, beautiful scenery and good roads. She also likes to swim in the lake when it rains, provided the lightning and thunder do not bother any it.

—o—

ENJOYS VACATION

This vacation I am spending at the farm time is most enjoyable. I spend most of my time at the Farmer school in my home town, which has an enormous playground. They have a plan which is called "Summer School," although it does not deal with studies.

Junior school sessions are held every day with the exception of Sunday, right out in the open. Many children attend, including many Slovenes. The faculty consists of three teachers. Two lady teachers who teach the girls sewing and singing, and a man teacher for the boys, who makes them participate in many games. The three teachers are very accommodating and good-natured.

The sewing teacher has taught us how to make tie-backs of oil cloth, which have turned out to be very attractive as well as useful. We play baseball, croquet and several other games. "Treasure Hunts" are enjoyed the most, almost all participat-

Two weeks ago we had a lady circus visitor. She spoke to us on "Circus Life." During the same week a number of ponies were secured, all of us taking a ride on them. Every week we are amused with different kinds of entertainment including music, poetry recitation, singing, dancing and acrobating stunts.

Anna I. Jevitz,
No. 66, S. S. C. U.

—o—

STORY OF BREAD

It was a little seed which the farmer call wheat. One day a farmer came in his hand. I wondered what he was going to do. He let me into a little hole. Then he covered me with some dirt.

Then I heard a pitter-patter of rain. I drank because it was rain. Very soon I was peeping through the earth. Some more rain came and I grew very long I was ready to cut.

When I was cut I went with my friends to a mill. There they squeezed me and was all flat. The workers called me flour. Then I was put into a sack with some of my friends. I was shipped to a bakery. The baker was a very fat and jolly man. I don't think he even noticed me, which I didn't like. He soon put me in a big pan. I found myself mixed with fat, milk, sugar and yeast. He shaped me into a loaf and put me into the oven. I was soon baked and put into the store. I was wrapped in a wax paper so no germs could get into me.

The next day a little girl came in the store and placed ten cents in the baker's hand. He handed me to her. I guess the girl wasn't careful because she dropped me on the sidewalk which hurt my head a little. She brought me to her home and I was put on a table ready to be eaten by the hungry children.

Ernest Peternel,
No. 2, S. S. C. U.

—o—

FOOLISH BOY

When I was a little boy, I remember one cold winter morning I was accosted by a smiling man with an ax on his shoulder.

"My little boy," said the man, "has your father a grindstone?"

"Yes sir," said I, "it is down in the shop."

"And will you get me a little hot water?" further asked the man.

I ran and soon came with a kettleful.

"How old are you, and what is your name?" he continued without waiting for an answer. "Will you turn the handle for me?"

Like a fool I went to work with all my might. What was more I sharpened the ax for him. At last when I was finished the man said:

"You rascal, you have been playing truant today, quick beat it to school before I report you."

Of course, I was late for school. But that incident will always be fresh in my memory.

Eleanor Svet,
Lorain, O.

—o—

A DANGEROUS PLACE

A long time ago there was a large, deep hole somewhat comparable to a pit, where strange things happen. Whoever came near this hole could hear queer voices and mysterious music. One day a poor little orphan girl, by the name of Lama, a girl of five, happened to pass that way.

She was a young girl and didn't know anything about this hole. She was looking toward the heavens and praying, when all at once she fell into the hole. For the first time since that hole was there did a large crowd gather around it. They could hear the girl's screams and yells, but nobody was brave enough to go and save her.

As the years gradually passed the hole was beginning to get smaller and smaller, until a day came when there wasn't any hole to be seen. One day an old man didn't seem to see the hole so he walked over it. As soon as he took the first step over it, he could hear voices screaming and crying. Immediately he was reminded of the little girl and started to dig. He finally struck the place where there were a number of skeletons. He saw one that he thought was that of the little girl, and as soon as he touched it dropped dead. After that nobody ventured near the spot. In time the hole and the incident was entirely forgotten.

Annie Meden,
No. 14, S. S. C. U.

—o—

THE MYSTERIOUS MANOR

The master of the mysterious manor had died, but as he seldom was seen before people did not bother about him. One day Leota Plunkett and Molly Ward were walking past the manor, and all at once appeared Mr. Glennon, the master. He motioned to the girls to come to him while they stood still with astonishment. Those gray sad eyes just drew them in the garden with those high walls.

They watched the old bearded man until they heard a clicking noise behind them. They turned around and the gate was shut. Leota and Molly ran and tried to open the gate. To their surprise it was locked. When they turned around Mr. Glenmore was gone.

"Oh, what shall we do," exclaimed Leota and then she started to cry.

"Let's try and climb the wall," said Molly anxiously.

They tried to climb the wall, but it was covered with thorny vines, scratching them and tearing their clothes. So they gave it up. They walked up the path to the large brick and stone house, knocked on the door. No one came in, so they walked in.

The manor was beautiful on the inside with expensive antique furniture. Rich oriental rugs covered the floor. Leota and Molly gasped in amazement. A lovely oil painting on the wall fascinated Leota. She touched it and the painting fell to the floor. As they were tying the torn cord they happened to see a piece of paper stuck in the frame. They read it. This paper contained information about going to the attic to recover the treasure which was hidden for two hundred years contained in the red chest secretly holed in the wall. The hole was marked by the picture of a dagger.

Leota and Molly went into the next room in which were steps leading to the attic. Near the steps was a glass case with guns in it. Leota said that they made her shiver, but Molly bravely stepped up to the case and took out a loaded revolver prepared for any danger that might be around the corners. The two girls went upstairs to the attic. When they opened the door they saw Mr. Grennon standing by a small window. He looked at them intently for a moment and when he saw the piece of paper in Leota's hand he darted at it with his gloved hand. Leota got scared and hit Mr. Grennon on the head. Molly saw something fall. It was a wig. So this was only a villain and not Mr. Grennon.

Molly kept him covered with the revolver while Leota phoned for the police. The man, Max Simon, said afterwards that he wanted to keep them for ransom. He also said that he heard about this piece of paper that Leota found in the picture frame, but couldn't located it.

The girls' fathers went into the manor and had no trouble finding the gold. This was divided and all were happy. A will was found in a drawer and it said that the manor and the garden were bequeated to the master's cousins, Mr. and Mrs. Louise Vene, who happened to be good friends to Molly and Leota.

Rose Mary Glazer,
No. 16, S. S. C. U.

—o—

MY VACATION

My vacation is about to end and indeed it is an unlucky one. The vacation last year was much better than this year, because I worked on different jobs on the farm. This year I only cultivated the land and rooted out the weeds with a hoe. Lack of rain is the cause for little work on the farm.

This is my last article in the Juvenile Department as I am going to be transferred to the Adult Department of St. Aloysius Lodge. Although it is nice to be transferred with the grown-ups, still the lodge dues are hard to meet. Just the same I will continue to hold an interest in the Juvenile Department.

This is about all I have to say. So, farewell, everybody and may I hear from you all some day in the New Era Supplement.

Frank Jancar,
No. 6, S. S. C. U.

—o—

BEAUTIFUL MORNINGS

May I sleep this night in peace,
While the stars above me peep,
Till the bright new noon day light
I set to work with all my might.

And the birds are singing
In the apple tree swinging,
As if they were taught
For the joy that the day has brought.

Mary Celesnik,
No. 94, S. S. C. U.

Mary Celesnik misses Ely, Minn., her former hometown with its beautiful lakes and scenery. Her folks have moved to North Chicago, Ill.

—o—

HAUNTED HOUSE
Part One

By ANTONIA GOVEKAR No. 94

On a lonely hill shut from view stood a large house. Many thought this house haunted and which belonged to two orphan sisters. It was during a party that the first cry came "Haunted House" which put a great fear in the hearts of many who lived near this large residence. This is how it happened.

On the eve of the party when all the guests arrived, one of the sisters wanted to go upstairs for a scented hanky and her wrist watch that she forgot. Louise, for that was her name, went slowly to her room occupying the other wing of the house. She went to the jewelry box and took her wrist watch out. While her back was turned a door opened from behind her and a white specter came out.

Louise saw the image in the mirror and cried out. Meanwhile, the white specter came up to her and was about to grab her when the door opened and Louise's sitser, Mary, arrived on the scene accompanied by two men-servants.

The white specter hurriedly stepped behind some curtains and disappeared. In a crazed fear Lou fainted. The men carried her to the bed while the other notified the doctor and a detective, Mr. Sharp. A thorough search was made of the room and in doing so one of the servants passed this curtain. A pair of hands grabbed him and pulled him behind the curtains. A lady saw this and screamed.

By now all was in confusion. The women hurriedly got their wraps and departed with hasty goodbye. Mary pleaded with some of the men to remain in the house and keep a watch. The others said that they would escort the women folk home and would return later, perhaps. After a time when Lou was calm and collected she described the actual scene just as it happened. She also admitted that it was only a dream, but could not convince the others as such.

All of a sudden the lights went out. Lou was in bed and fainted again. Everyone was still and waited for results. Soon they saw a person walking through the room. A number of men jumped on him and when the lights were turned on it was found, to everybody's dismay, that it was only the butler.

"Sh, sh!" he said in a whisper. "Hurry, turn off the lights. It's coming. I heard it. Quick before it is too late."

The lights were turned off. Everyone scattered to their hiding places. The same door opened from which Lou's specter came, but this time a group of specters were followed by a man and a lady. Lucky the others were in the other room hiding. The man, who was the leader, said to the lady:

"Now, tell them what we want. Quick!" He added in harsh tones, "we can't wait all day."

"You are to capture the girl, Lou, but you must not harm her. You are to scare the others away including her sister, Mary. If you succeed in carrying out this plan you will get your money, but not before. You understand, no harm must come to the girl. Now scatter to your posts; meanwhile we will keep the other man as prisoner, until he is ransomed."

As soon as she was finished the man said to himself: "Fools, do they think they are getting the best of it. I will arrange matters so I will have all for myself."

Little did these plotters dream of what was in store for them. The guests with Mary and Lou went downstairs and it wasn't long before the butler announced that Dr. Higgins, family doctor, and the detectives had arrived. The doctor examined Lou closely for trace of any injury, while Lou told him of the incident. A note was found besides Lou on her bed which read: "Beware all those in this haunted house. We will get you yet."

A heavy guard was placed in and around the house. Both Lou and Mary had three guards apiece. The detectives had full charge of the house, and ordered everyone to be on time for the breakfast the following morning.

(To Be Continued)

—o—

EDITOR'S NOTE

A poem was submitted by A. M. of Blaine, O., entitled "Our Star," and was an exact copy of the poem that is contained in the volume of Ivan Zorman's Slovene (Jugoslav) Poetry. "Our Star" has been translated from the Slovenian language into the English language by Mr. Ivan Zorman, and was originally written by Simon Gregorcic.

Time and again we have warned the Juveniles not to submit copy articles, poems, or anything else that was not original. Such contributions are discarded and promptly thrown in the waste basket. Juvenile members should write stories and poems of their own both for the sake of seeing their work in print and perhaps win a prize, and for improving their art of writing.

A number of long stories have been received lately that could have been made much shorter. Some Juvenile contributors have an idea that quantity and not quality counts in the end. A short, well-written painstaking article is worth any number of pages of poorly-written matter.

—o—

NAGRADE

Za dopise, priobčene v julijski prilogi Nove Dobe, so bile mladinskim dopisnikom nakazane sledeče nagrade:

Justina Zbašnik, dr. št. 2, Ely, Minn., $2.00; Christina Lobe, društvo št. 1, Ely, Minn., $1.00.

DOPISI

(Nadaljevanje iz 2. strani)

omogočeno udeležiti se piknika.

Z bratskim pozdravom,
John Cerne Jr.
tajnik dr. št. 6 JSKJ.

Ely, Minn.

Članice društva Marija Čistega Spočetja, št. 120 JSKJ so tem potom vabljene, da se polnoštevilno udeležijo prihodnje redne mesečne seje, ki se bo vršila v nedeljo 17. avgusta. Kot je vsem znano, so minnesotska društva JSKJ ustanovila med seboj Federacijo ali Zvezo. Na naši zadnji seji pa je bilo premalo članic navzočih, da bi bile sklepale o tej zadevi, zato smo jo odložile za sejo 17. avgusta.

Ob enem obveščam članice "Atletičnega kluba," da se njih redne seje vrše vsaki prvi ponedeljek v mesecu. Ker precejšno število članic ne prihaja na seje, ne vedo, kako klub obstoja in kako vrši svoje delo. Pravilno bo torej, da navedem tu nekaj podatkov o našem "Atletičnem klubu."

Klub šteje nad 20 članic. S pomočjo prispevka, ki smo ga dobile iz športnega sklada JSKJ, smo kupile nekaj uniform, to je za basket ball in za tenis. Dekleta so si kupile "tennis rackets," ki so stali okrog $86.00. Od časa ustanovitve kluba smo imele pri vajah za basketball enega šolskega učitelja, ki je članice poučeval, proti primerni plači seveda. Da smo mogle pokrivati nastale stroške, je bilo treba včasi napraviti kakšno veselico ali kaj podobnega.

Tudi pri Arrow Head društvu imajo športni klub z izvrstnimi igralkami. Korajžo in veselje imajo za basketball in tenis. Toda bile bi še bolj interesirane, če bi naša društva na "Range" tudi ustanovile svoje športne klube. Znano je, da je na primer na Evelethu, Chisholmu, Virginiji, Toweru in Gilbertu dovolj mladine, katero bi bilo mogoče pridobiti za našo Jednoto potom športnih klubov. Bilo bi več zanimanja, in tudi nekaj mladine drugih narodnosti bi privabili v naše vrste.

Tem potom apeliramo na društvene tajnike in druge uradnike naših društev na Range, da gredo na delo in ustanove športne klube oziroma atletične klube pri društvih, da bomo lahko medsebojno z našimi "teami" imeli igre in tekme. Na ta način bomo pritegnili v vrste JSKJ tudi mnogo mladine, ki bi je sicer ne mogli dobiti.

Upamo, da se kmalu oglasijo vsa JSKJ društva na Range. Vse informacije lahko dobijo iz glavnega urada, in od tam bodo z veseljem pomagali, kolikor bodo mogli.—S sestrskim pozdravom, za društvo št. 120 J. S. K. Jednote:

Rose Svetich, tajnica.
Mary Jerich, predsednica.

Pittsburgh, Pa.

Pevci slovenskega pevskega društva "Prešeren" si štejejo v dolžnost, da se javno zahvalijo društvom, ki so po svojih možnostih prispevala in pomagala, da more "Prešeren" širiti lepo slovensko pesem v tujini. Naše pevsko društvo bo vedelo ceniti to pomoč in naklonjenost in bo skušalo pri vsaki priliki povrniti uslugo za uslugo, kajti "Prešeren" vpošteva izrek, ki pravi, roka roko umije, obe pa obraz.

Pevsko društvo "Prešeren" tem potom naznanja vsem Slovencem, bratom Hrvatom in ostalim Slovanom v Pittsburghu in okolici, da priredi med nami svoj prvi koncert naša domača umetnica Mrs. Mary Besal. Koncert se bo vršil 31. avgusta ob osmi uri zvečer (novi čas) v Slovenskem Domu v Pittsburghu. Mrs. Besal je dobro poznana v naši naselbini, malokomu pa je bilo dozdaj znano, da poseduje krasen glas, da je dovršila šolo v petju in igranju violine in da je prava umetnica v tej stroki. Radi tega pevsko društvo "Prešeren" z mirno vestjo in z veseljem priporoča tukajšnim in okoliškim Slovencem in drugim Slovanom, da pridejo poslušati njen koncert, ker je uverjeno, da bodo vsi posetniki zadovoljni. Dajmo naši domači umetnici vzpodbudo za nadaljni vzlet in razvoj z obilno udeležbo na njenem prvem koncertu. Talenti in dosežena umetniška višina vsakega posameznega člana našega naroda je v čast nam vsem.

Torej, na svidenje 31. avgusta ob osmi uri zvečer v Slovenskem Domu v Pittsburghu!

S pevskim pozdravom,
Ivan Varoga.

Chicago, Ill.

Vse članice društva Zvezda, št. 170 JSKJ tem potom obveščam, da se bo vršila naša prihodnja seja v četrtek 21. avgusta v navadnih prostorih. Vse članice so vabljene, da se te seje gotovo udeležijo; imele bomo nekaj novo pristoplih članic, zato se spodobi, da posebno pri tej priliki pokažemo, da se zanimamo za naše seje, ob enem pa tudi za napredek društva in Jednote. Za rešiti bomo imele tudi več važnih točk, zato je navzočnost vseh članic potrebna. Končno bomo še videli, katera izmed nas ima najbolj srečno ime. Torej, sestre, da se vidimo 21. avgusta! Sestrski pozdrav vsem članom in članicam naše Jednote!

Agnes Jurečič,
tajnica dr. št. 170 JSKJ.

Pittsburgh, Pa.

Kakor je bilo že poročano v Novi Dobi, je razpisan izredni asesment za člane, ki so zavarovani za dva dolarja dnevne bolniške podpore. Izredni mesečni asesment znaša en dolar od člana, se prične z mesecem avgustom in traja do preklica. Zato tem potom pozivljam vse tiste člane društva sv. Štefana, št. 26 JSKJ, ki so zavarovani za dva dolarja dnevne bolniške podpore, da imajo z mesecem avgustom počenši en dolar več plačevati, in to do preklica v našem glasilu.

Zadnje čase tudi mnogo članov pozablja, kdaj imajo plačati svoje asesmente. Društveni sklep določa, da mora vsak član plačati do 23. v mesecu. Prosim, da člani to vpoštevajo. Kdor ne bo tega storil, naj morebitne posledice sam sebi pripiše. Toliko vsem v prijazno obvestilo.

V nedeljo 3. avgusta so se zbrali v Slovenskem Domu v Pittsburghu zastopniki deveterih društev JSKJ, z namenom, da ustanovijo Zvezo JSKJ društev za Pennsylvanijo. Organizacija je bila ustanovljena in je bilo določeno, da se bo vršila prihodnja seja prvo nedeljo v novembru ob dveh popoldne, in sicer zopet v Slovenskem Domu v Pittsburghu. Na vsa društva J. S. K. Jednote v Pennsylvaniji tem potom apeliram, da določijo svoje zastopnike in jih pošljejo na omenjeno sejo.

Mnogo pozdravov vsemu članstvu!

Joseph Pogačar,
tajnik dr. št. 26 JSKJ.

Canonsburg, Pa.

Zopet sem se odločil, da napišem par vrstic iz naše naselbine East Canonsburg.

Tukajšne delavske razmere so bolj slabe, posebno tovarne so začele obratovati slabejše, z izjemo S. T. & P. Na vidiku je torej precejšna brezposelnost, toda kljub temu nismo tako prizadeti kot se poroča iz drugih naselbin.

Naše tukajšno angleško poslujoče društvo Jefferson Collegians, št. 205 JSKJ, dobro napreduje. Pred kratkim smo ustanovili baseball team, ki že jako dobro igra. Sestoji iz samih mladeničev med 17. in 24. leti, in smemo pričakovati, da postane v par letih eden najboljših teamov v Canonsburgu.

Dne 16. avgusta se bo vršila velika plesna veselica našega društva, na katero so poleg društvenih članov prijazno vabljeni tudi vsi prijatelji našega mladega društva. Veselica se bo vršila v Polski dvorani v East Canonsburgu, Pa. Za ples bo igral dober orkester.

Pred par meseci je prejelo naše društvo povabilo od Evening Star Lodge, št. 218 SSPZ, v White Valley, Pa., da se udeležimo razvitja zastave omenjenega društva. Omenjena slavnost se bo vršila dne 30. avgusta. Na društveni seji je bilo sklenjeno, da se omenjene slavnosti po možnosti udeležimo (prostovoljno) in da v to svrho vzamemo veliki White Star Line bus. Ker pa nam še ostaja za približno deset oseb prostora, apeliramo na ostale rojake, ki imajo namen se udeležiti gori omenjene proslave, da se nam pridružijo. Za pojasnila naj se obrnejo na sosestro tajnico Anno Retzel, če mogoče do 15. avgusta. Tudi na busu ne bo brez zabave, ker bo z nami sobrat Anthony Polk s svojo harmoniko; vsaj tako nam je obljubil in bo nedvomno držal besedo.

Na dan 30. avgusta bo tudi naš baseball team tekmoval z Whitevalleyčani za prvenstvo.

Pozdrav vsem članom JSKJ in čitateljem Nove Dobe!

Frank Samsa,
član društva Jefferson Collegians, št. 205 JSKJ.

Walsenburg, Colo.

Dne 23. junija je preminila moja draga soproga, članica društva št. 101 JSKJ, in naša dobra Jednota je točno storila svojo dolžnost in izplačala smrtnino, za kar se lepo zahvalim, in priporočam isto rojakom za pristop. Poleg mene, žalujočega soproga, ostavlja hčerke Eleno, Mary in Katarino in sina Johna. Prav lepo se zahvalimo tudi vsem, kateri so se udeležili pogreba.

Mike Medved.

Duluth, Minn.

ČLANSTVU AMERIŠKE JUGOSLOVANSKE ZVEZE IN OSTALEMU JUGOSLOVANSKEMU OBČINSTVU V MINNESOTI. —

Šesta letna konvencija Ameriške Jugoslovanske Zveze v Minnesoti se bo letos vršila v mestu Gilbert, Minn., v nedeljo dne 31. avgusta.

Mesto Gilbert je izbral glavni in centralni odbor Zveze na svoji letni seji v Evelethu, Minnesota, dne 6. julija t. l., in sicer zato, ker člani "Buhl Ameriškega Jugoslovanskega Kluba" so bil imnenja, da njih mesto Buhl, ki je bila izbrano za šesto letno konvencijo Zveze na zadnji konvenciji Zveze, nima dovolj ugodnosti za postrežbo in zabavo tolikega števila ljudstva, ki navadno pride v mesto, kjer se vrši letna konvencija Zveze, oziroma naš jugoslovanski letni sestanek.

Zatorej je upati, da bo vsak član in članica Zveze, kakor tudi splošno občinstvo zadovoljno z mestom Gilbertom, kajti naši rojaki v Gilbertu so nam že itak izkazali veliko gostoljubnost ob času tretje konvencije Zveze léta 1927, in vsled tega bo zopet vsak rojak z veseljem prišel v Gilbert, kjer nas zopet čaka izvrstna zabava.

Ker je še nekoliko slovenskih naselbin v St. Louis okraju, Minnesota, kjer še ne eksistira lokalni klub Zveze, je upati, da se bodo naši rojaki potrudili in še ustanovili klub, tako, da letošnje leto naj bi bila zastopana vsaka slovenska naselbina na šesti letni konvenciji Zveze.

Torej rojaki in rojakinje, na svidenje v Gilbertu v nedeljo dne 31. avgusta!

Z rojaškim pozdravom,
John Movern,
tajnik A. J. Z.

Kitzville, Minn.

Pozor Slovenci in Slovenke v Kitzville in Hibbing, Minnesota!

Tem potom se vljudno vabi vse Slovence in Slovenke v mestu Kitzville in Hibbing, Minnesota, da se udeleže javnega shoda v nedeljo dne 17. avgusta ob 2. uri popoldne v novi hiši I. Musicha v Kitzville, Minnesota. Namen tega shoda je, da se vsi skupaj posvetujemo, ali bi bilo umestno in koristno za nas Slovence, ako bi si ustanovili izobraževalni klub in ga pridružili Ameriški Jugoslovanski Zvezi v Minnesoti. Potom kluba bi tudi lahko veliko koristnega storili za naš narod v naši naselbini, kajti zbrali bi se večkrat skupaj in razmotrivali razne probleme, ki nastanejo od časa do časa v naši naselbini, ter v našem okraju in državi v obče. Tak klub bi moral biti v vsaki slovenski naselbini v Ameriki.

Zatorej mi apeliramo na vas rojaki in rojakinje, da se odzovete našemu povabilu. Vsak rojak bi moral seboj pripeljati svojo ženo in odrastle otroke, kajti brez žensk dandanes ni nikakega uspeha na svetu.

Našemu povabilu se je tudi odzval naš obče znani rojak, glavni tajnik Ameriške Jugoslovanske Zveze v Minnesoti, John Movern iz Duluth, Minn., ki nam bo brez dvoma kaj zanimivega povedal.

Torej na svidenje v nedeljo dne 17. avgusta 1930!

Za pripravljalni odbor:

Ignac Musich, tajnik.

Duluth, Minn.

Tem potom naznanjam vsem članom in članicam društva Liberty, št. 107 JSKJ, da je društvo sklenilo, da od sedaj za naprej se bodo vršile društvene mesečne seje vsak tretji četrtek v mesecu v Forest Hall (navadnem prostoru), in sicer ob 8. uri zvečer. To spremembo je naredilo članstvo zaradi tega, ker v poletnem času je zelo težko dobiti člane in članice, da bi obiskovali mesečne seje v nedeljo zvečer, ker marsikdo je na nedeljo iz doma. Večina jih je, ki imajo svoje avtomobile in gredo ribariti na nedeljo.

Zatorej vljudno vabim, da se vsi člani in članice udeležijo prihodnje mesečne seje, ki se bo vršila v četrtek 21. avgusta ob 8. uri zvečer v navadnem prostoru, Forester's Hall.

S sobratskim pozdravom,
John Movern,
predsednik Liberty Lodge, No. 107, JSKJ.

Cleveland, O.

VAŽNO NAZNANILO! — Tem potom obveščam vse člane društva sv. Janeza Krstnika, št. 37 JSKJ, kateri so zavaro-

(Dalje na 6. strani).

Lea Fatur

VILEMIR

POVEST IZZA TURŠKIH BOJEV

(Nadaljevanje)

Krasen kot mlado solnce je sedel mladenič v plemiški obleki na skokonogem belcu. Čapka s ponosnim peresom, suknjica iz modrega baržuna, svetli meč, vse se mu je podalo prav tako, kot da ni nikoli nosil hodnične robače. S takim oprodom se je lahko postavil knez. Vseh oko je strmelo vanj, in nihče ni opazil turškega aga, sedečega prosto na svojem konju. Rihenberški ga je velel razvezati, potem ko mu je bil Turčin prisegel, da ne uide na poti.

"Zbogom, Vilemir!" je klicalo vse vprek, ko sta odhajala. Gradnik se je obrnil mirno. Nihče naj ne vidi solze v njegovem očesu. Odhaja nekdanji lastnik bogatih dvorov, ž njim odhaja spomin, zadnji spomin mladosti. Brez imena in rodu gre mladenič, da si pridobi dom, ime. Tlačan Cvetnič je umrl od turške roke, lepi zeleni grič je pripal gradu . . .

Dolgo je gledal gradnik za odhajajočim. Po cesti se je vzdigoval prah pod kopitom urnih konj. Lepa vrsta jih je bila. Iz praha se je pokazovala čapka s peresom in šopkom, rožmarin je kimal, rožmarin zelen. Čelada viteza se je zasvetila, čop Tonetove kape je odskakoval, široki krajci klobukov so se prigibali . . .

Ko je že tožilo prazno obrežje za krasnim mladeničem, je stopila izza gostega grmovja zajokana mala Bleda. Tiha, plaha je bila prišla za drugimi, da si opoji srce ob njej tako ljubem obrazu. Skrila se je, da ne vidi škodoželjni ženski svet njenih solz—da se ne posmehuje njeni boli . . .

Več kakor vsem drugim je bil Vilemir njej, ki ni imela bratov, ne sestre, ne roditeljev . . . Že za rana jo je izključila njena postava od vseh sladkih tajen in šumnih veselic drugih deklic. Ko so se vrtile pod lipo, ko so poslušale sladke besede —ni bilo Blede med njimi. Iskala je utehe v učenju, zdravilu ljudi in že so jo imenovali čarovnico . . . S sestrinsko ljubeznijo se je bila oklenila dečka, čigar lepota in razum sta pričala, da ni rojen za slamnato streho . . . Pride čas, razjasni se dečkova temna usoda, dobro, da je izurjen v vednostih . . . Pa vživela še je v njegovo dušo in si ni mogla več misliti življenja brez njega. Bogve, kako je prišlo . . .

In zdaj je šel v svet za srečo, slavo . . . Dala mu je šopek na pot . . . Druge oči ga bodo ljubile, ko bo umirala ona za njim. Sama, sama, ostane . . . Saj jo zapusti skoro tudi stari, onemogli stric . . . Bleda, modra Bleda! Vsaki korenini veš zdravilno moč—katera izleči tvoje bolno srce?

V.

V varnem zavetju Goleca, zasenčen od temnega jelovja velikega in malega Čuka je gledal na hribu ob Branici stoječi stari grad Rihenberk ponosno na Čavna gole vrhove. K njemu so se stiskali trdni stolpi in stolpiči, nad njim se je dvigal mogočno visoki stolp, "straža," in gledal kot orel v lepo vipavsko dolino. Bel trak se je vil po dolini—cesta, ki je vodila iz Vipave v Gorico. Proti možni nevarnosti je branilo grad trdno taborsko zidovje. Za zidom so se stiskale kamenite hiše grajskih podložnikov in ondi je stala majhna cerkev. Pod zidom pa je šumela Branica, ovijala grič in branila nepozvanemu gostu vhod. Trdi se, da so grad sezidali priseljeni bavarski Greifenbergi; po njih da sta dobila ime grad in okolica.

Greifenbergi so bili vazali goriških grofov. Pogumni in predrzni so se povzpeli do visokih časti in velikega bogastva. Bili so mejni grofje patriarha, vtikali so se v vsako zadevo in pravdo dežele. Posedovali so grad Pietropelosa v Istri, imeli pravico do desetine v Miljah in Figaroli, posestva pri Kopru, zemljo in tlačane v Koroški Zili, gozd med Vižinado in Forico, grad Grisinjan in mline ob Kveti. Prvič se imenujejo Greifenbergi v neki listini l. 1232., izginejo okoli l. 1380. Mogočni rod je izumrl. Odtedaj so podeljevali goriški škofje grad in pripadajoča posestva v oskrbo raznim plemičem.

L. 1460. je bival Febo della Torre kot gradnik v njem. Ko pa je postal goriški kapetan, se je preselil v Gorico. Grof Lenart je izročil grad tujemu, znamenitemu vitezu. Nihče ni vedel, odkod je prišel, senca je krila njegovo plemenito lice in pokoljenje. Vendar se mu je poznalo, da je vajen gospodovati; kmalu so se obračali plemiči okolice do njega za razsodbe v prepirih, kmalu je zaslovel kot poznavalec prava in vitez brez madeža. Ž njim je bila prišla v deželo drobna deklica, ki se je razvila v nežen, bled cvet. In plemiči so pozabljali žarnookih, krepkih goriških gospic zaradi nežne grajske deve, katero je zapuščal viteški stric mnogokrat njihovemu varstvu hiteč sam na poboj s Turki.

Zobati rob "straže" je štrlel v prijetni zrak večera, ki se je spuščal na brda. Nad stolpom se je ponesel orel in letel počasi na Golec. V krempljih mu je visel plen. Golobje oko je sledilo orlu, dokler ni izginil za sivo skalo . . .

Vzdih se je izvil iz mladega srca. Romana se je naslonila trudno ob kameniti rob. Dolgo, dolgo že šteje dnove, odkar je odpotoval stric. Zvabili so ga bili prvi seli pomladi za negotovim ciljem, v daljne, druge kraje, kamor poletava vedno njena duša vsako tiho noč, ko brli skozi posteljine zavese lučka pred sveto podobo, ko trepeče njena duša v molitvi za junaka, edinega varuha njene mladosti, ki je šel v svet za vero očetov, za sledom bitja, dragega njemu in njej . . . Breskvin nežni cvet je dičil grajski vrt, izza skal so gledale ponižne ljubice, zrak je bil voljan, vetrič božajoč. Takrat je bil odšel stric junak. Celega sveta najlepše oči so se nasmehljale tam še enkrat v njene—poskočil je konj, zavalovila perjanica, zavihral plašč . . . Vetrič jo je pozdravljal, a ona ni videla mladega oproda, strmela je za stricem . . . Pomlad se je začela takrat, a zdaj se je jelo poslavljati poletje. Žito in sadje je dozorevalo, po gričih so se ponašale oljke z gostim, drobnim sadjem, ob znožju gričev je zavijalo trsje kipeče jagode v široke, svetle liste, mlada ptičad se je urila za polet črez širno morje—strica ni od nikoder . . .

(Dalje prihodnjič)

GLASOVI Z RODNE GRUDE

Kamenja se je najedel in umrl. Devetletni Peter, sin sluge Ferdinanda Nikolića, se je igral z otroci ob vodi. Igrali so se s kamenčki, Peterček je pa stavil, da jih lahko poje več, nego vsi drugi skupaj. Začel je res požirati kamenčke in jih je pogoltnil dve pesti. Nenadoma pa je začutil hude bolečine v želodcu. Morali so ga prepeljati v bolnico, kjer so mu sicer takoj izpraznili želodec, toda navzlic temu je nesrečni deček kmalu v strašnih mukah umrl.

Zlato poroko sta nedavno obhajala v vasi Podlipi pri Vrhniki zakonca Matija in Neža Jurca. Čestiti ženin se je rodil 15. februarja 1855 v Podlipi 10, njegova zlata nevesta pa 20. januarja 1856 v Grčarevcu pri Planini. Poročila sta se 20. novembra 1880 v podlipski cerkvi. Njun zakon je bil blagoslovljen z osmimi otroki, izmed katerih so umrli trije sinovi in ena hčerka. Ostali, in sicer trije sinovi in druga hčerka, pa stalno živijo v Ameriki. Slavje zlate poroke se je vršilo ob času, ko sta bila dva sina in hči ravno na obisku v domovini.

"Službene Novine" objavljajo odredbo notranjega ministrstva, s katerim se spreminjajo nekatere meje in določa novo področje srezov Čabar in Kočevje. Po tej uredbi se občine Oselnice, Trava in Draga izločijo iz kočevskega sreza ter pridružijo čabarskemu.

DOPISI

(Nadaljevanje iz 5. strani)

vani za dva dolarja dnevne bolniške podpore, da je zopet naklada za nedoločen čas. Vse tiste, ki pošiljajo asesment po drugih članih ali po otrocih, opozarjam, naj izroče vsakemu en dolar več za vsakega člana, kateri je zavarovan za dva dolarja.

Prosim pa vas vse, da se vam ni treba jeziti na tajnika, ker tajnik ni tega kriv, ampak so krivi dotični, kateri so taka pravila naredili, da je tolikokrat naklada, ker so imeli premalo vpogleda v tej velevažni točki.

Nadalje pozivljam vse člane, da se gotovo udeleže prihodnje seje; na tej seji se bo zopet razpravljalo glede inicijativnega predloga, kateri je bil začasno umaknjen.

Pozdrav!

Frank Kačar, tajnik.

Denver, Colo.

Članom društva sv. Jožefa, št. 21 JSKJ, ki so zavarovani za dva dolarja dnevne bolniške podpore, se tem potom naznanja, da je razpisan izredni asesment po en dolar na mesec. Ta asesment stopi v veljavo s 1. avgustom in bo trajal do preklica. Velja le za tiste člane, ki so zavarovani v dvadolarskem skladu. Za enodolarski sklad ni naklade. Člani, ki so zavarovani v dvadolarskem skladu naj to obvestilo vpoštevajo.

Nadalje naznanjam, da bom vse tiste člane in članice, ki ne bodo plačali svojih asesmentov do 25. v mesecu, suspendiral. Vzrok temu je, ker iz društvene blagajne ne smem za nobenega založiti, iz svojega žepa pa tudi ne morem. Vsak sam zase gotovo lažje plača, kot pa da bi tajnik plačeval za osem ali deset članov. Torej, glejte vsi, da boste imeli plačane svoje asesmente vsaj do 25. v meseca, da ne bo prišlo do suspendacij. — Z bratskim pozdravom,

John Schutte, tajnik,
4751 Baldwin Ct.

Cleveland, O.

Pred kratkim sva se mudili s hčerko na enotedenskem posetu v Detroitu ter sva bili med tamkajšnimi Slovenci deležni toliko gostoljubnosti in prijateljstva, da ga ne bova nikoli pozabili. Posebno naj bo izrečena iskrena hvala družini Vovk in pa družini J. Vidmar na Forestlawn. Najlepša hvala, in na zopetno veselo snidenje!

Frances Legat.

Gilbert, Minn.

Društvo sv. Jožefa, št. 20 JSKJ je sklenilo na redni seji meseca julija, da se korporativno udeleži parade Ameriške-Ju-Jugoslovanske Zveze, ki se bo vršila tu 31. avgusta in se prične o polu dveh (1:30) popoldne. Vsi člani in članice naj se gotovo udeleže. Zbrali se bomo v Ant. Kušlanovi dvorani in od tam bomo točno ob eni uri popoldne odkorakali v Gilbert Auditorium.

Z bratskim pozdravom,

Joseph Novak,
tajnik dr. št. 20 JSKJ.

New Duluth, Minn.

Člane društva sv. Srca Jezusa, št. 128 JSKJ pozivljam, da se polnoštevilno udeležijo prihodnje mesečne seje, ki se bo vršila v nedeljo 17. avgusta ob eni uri popoldne v navadnih prostorih. Za rešiti imamo mnogo važnih zadev. Zato imamo društvene seje in zato plačamo dvorano, da pridemo vsak mesec enkrat skupaj in naredimo kaj koristnega za društvo in Jednoto.

Pri tej priliki opozarjam tudi tiste člane, ki so bolj pozni za asesment plačati, da jaz ne bom zalagal asesmenta za nikogar. Kdor ne bo plačal svojega asesmenta do 25. v mesecu, bo suspendiran; pa ni treba potem misliti, da je tajnik kriv. Ako bi vsak prečital pravila JSKJ, bi bilo poslovanje mnogo lažje in točnejše, kot je.

Kot je bilo v našem glasilu že naznanjeno, je zopet nastal primanjkljaj v dvadolarskem bolniškem skladu in glavni odbor je za ta sklad moral razpisati izredni asesment. Torej, vsi tisti člani, ki so zavarovani za dva dolarja dnevne bolniške podpore, imajo za plačati mesečno po en dolar naklade, začenši z avgustom, pa do preklica. Temu izrednemu asesmentu so nedvomno v precejšni meri krivi tisti člani, ki obiskujejo bolnike in včasi zamežijo, ko bi ne smeli, češ, naj siromak dobi podporo, saj Jednota ima dovolj denarja. Tega pa ne pomisli, da Jednota smo mi člani in da moramo vsak nastali primanjkljaja sami pokriti. Poleg tega se mi pa tudi zdi, da je naš glavni odbor nekoliko preveč radodaren. Skoro vsaki prošnji, ki pride v glavni urad in se predloži letni ali polletni seji glavnega odbora, se ugodi. Druge organizacije niso tako radodarne, drže se pri raznih podporah bolj strogo pravil, pa kljub temu napredujejo. Naša J. S. K. Jednota je dobra organizacija, toda meni se zdi, da je nekoliko "predobra," preradodarna.—Pa še kaj o priliki; za danes naj zadostuje.

Z bratskim pozdravom,

Joseph Anzelc.

Canonsburg, Pa.

V nedeljo 3. avgusta se je vršila ustanovna seja, na kateri je bila organizirana, oziroma ustanovljena Zveza JSKJ društev za Pennsylvanijo. Na tej seji, ki se je vršila v Slovenskem Domu v Pittsburghu, je bilo po 21 zastopnikih zastopano precejšno število društev. Navzočih je bilo pa tudi lepo število drugih članov. Med njimi so bili tudi trije glavni uradniki JSKJ, namreč glavni predsednik Anton Zbašnik, glavni nadzornik John Balkovec in vrhovni zdravnik dr. F. J. Arch. Sprejetih je bilo mnogo dobrih zaključkov. Začasnim predsednikom Zveze je bil izvoljen Ivan Varoga, tajnikom Joseph Pogačar, zapisnikarjem pa John Žigman. Podrobnosti bodo poročane pozneje.

Z bratskim pozdravom,

John Žigman.

GLAS NARODA

NAJSTAREJŠI NEODVISNI SLOVENSKI DNEVNIK V AMERIKI

je najbolj razširjen slovenski list v Ameriki; donaša vsakdanje svetovne novosti, najboljša izvirna poročila iz stare domovine; mnogo šale in prevode romanov najboljših pisateljev.

Pošljite $1.00

in pričeli ga bomo pošiljati.

Vsa pisma naslovite na:

GLAS NARODA
216 W. 18th St., New York, N. Y.

TISKOVINE
od najmanjše do največje za
DRUŠTVA
in posameznike
izdeluje lično moderna slovenska unijska tiskarna.

Ameriška Domovina
6117 ST. CLAIR AVE.
CLEVELAND, OHIO

VABILO

na

PIKNIK

katerega priredi

DRUŠTVO NAPREDEK

št. 132 J. S. K. Jednote

v Slovenskem Društvenem Domu na Recher Ave., EUCLID, O.

V NEDELJO 17. AVGUSTA 1930

Vse članstvo društva Napredek, kakor tudi vse ostalo slovensko občinstvo iz Euclida, Nottinghama in sploh iz Velikega Clevelanda je vljudno vabljeno, da nas poseti na tem pikniku. Nekdo, ki bo srečen, dobil bo krasno posteljno pregrinjalo. Igrala bo izvrstna godba, in za vsestransko dobro postrežbo jamči

ODBOR

Največja in najstarejša slovenska zlatarska trgovina v Ameriki. Zlatarske predmete vseh vrst, gramofone, piane in radio vseh cen in izdelkov dobite pri nas.

FRANK ČERNE
6033 St. Clair Ave. in 930 E. 79th St., Cleveland, O.

ANTON ZBAŠNIK
Slovenski Javni Notar
5400 Butler Street Pittsburgh, Pa.

Izdeluje pooblastila, kupne pogodbe, pobotnice vsake vrste, aperoke in vse druge v notarski posel spadajoče dokumente, bodisi za Ameriko ali stari kraj. Pišite ali pridite osebno.

PRIPOROČAM SE KOT
STAVBINSKI MOJSTER
članom J. S. K. Jednote in ostalemu občinstvu v Barbertonu in okolici. Za zgradbo hiš in kar druzega spada v to stroko naj se rojaki obračajo na svojega kontraktorja na naslov:
MILAN BOZICK, 336 Washington Ave., Barberton, O.

Neglede kje živite, v Kanadi ali Združenih državah

je pripravno in koristno za Vas, ako se poslužujete naše banke za obrestonosno nalaganje in pošiljanje denarja v staro domovino.
Pri nas naloženi zneski prinašajo obresti po 4½ procentov, nove vloge se obrestujejo že s prvim dnem vsakega meseca.
Naša nakazila se izplačujejo na zadnjih poštah naslovljencev točno v polnih zneskih, kakor so izkazani na pri nas izdanih potrdilih.
Naslovljenci prejmejo torej denar doma, brez zamude časa, brez nadaljnih potov in stroškov.
Posebne vrednosti so tudi povratnice, ki so opremljene s podpisom naslovljencev in žigom zadnjih pošt, katere dostavljamo pošiljateljem v dokaz pravilnega izplačila.
Enake povratnice so zelo potrebne za posameznike v slučaju nesreče pri delu radi kompenzacije, kakor mnogokrat v raznih slučajih tudi na sodniji v stari domovini.

Nujna nakazila izvršujemo po Cable Letter za pristojbino 75 centov

Sakser State Bank
82 Cortlandt St. Tel. BARclay 0380
NEW YORK, N. Y.

SLOVENSKA CVETLIČARNA V JOHNSTOWN, PA.
nudi rojakom po zmernih cenah VENCE in CVETLICE za najrazličnejše prilike. — Istotam si lahko izposodite slovenske knjige.
MRS. MARY TOMEC
120 Market St., Johnstown, Pa.
(Tel. 6211-B)

V SPOMIN OBLETNICE

SMRTI NEPOZABNEGA SOPROGA, OČETA IN BRATA

JOHNA HODNIK

ki nas je nenadoma zapustil dne 13. avgusta 1929, star šele 52 let.

Ni minilo nam še dneva, ni minilo še noči, brez spominov naših na Te, kar med nami več Te ni!

Oj usoda, ti življenje
nam prehitro zagreniš,
radost srčno nam v trpljenje
v hipih kratkih spremeniš.

Ljubi mož in brat in oče,
več ne čuje se Tvoj glas,
v rakev so Te položili
in odnesli proč od nas.

Solza pada še nešteta,
tužno bije nam srce,
moža, brata in očeta
vzela smrt za vedno je.

Ah, čemu pač mesec avgust
dragi vzel si nam zaklad?
Dneve srečne si spremenil
v žalovanje nam in jad.

Sladko spavaj pod gomilo,
rešen truda, bolečin;
v srcih naših tožno-sladak
bo žarel na Te spomin.

Žalujoči ostali: Apolonija Hodnik, soproga; John, Joe, Henrik in Leo, sinovi; Angelina, hčerka, vsi v Bear Creek, Mont. Brat v Mill Iron, Mont.

NAZNANILO IN ZAHVALA

Tužnih src naznanjamo sorodnikom, prijateljem in znancem, da je dne 19. julija 1930 za vedno zatisnil oči ljubljeni sin oziroma brat

JOHN MARKOVICH

Pobrala ga je mučna proletarska bolezen jetika. Dragi pokojnik je bil rojen leta 1903 v vasi Vranoviče, okraj Črnomelj v Jugoslaviji. Tukaj na Ely je bival 23 let pri svojih starših, bratih in sestrah.

Iskrena hvala naj bo tem potom izrečena vsem darovalcem vencev in cvetlic, katerih imena tu slede: Brat Joe in družina Markovich, sestra Ivana Markovich, Mary sestra in družina Rebol, brat Steve Markovich od Mr. in Mrs. John Markovich jr., bratje in sestre: Julius, Albert, Matt, Margaret in Barbara, Mr. Mat in Mrs. Annie Cherne, Mr. in Mrs. Toivo Harry in družina, Mrs. Mary Markovich, Mr. in Mrs. A. Prushek in družina, E. W. Hanson, Mr. in Mrs. A. Šeme, Kovach bratje, Buffalo, John Apostel in John Ballas, Mr. in Mrs. Frank Terlep in družina, Mr. in Mrs. John Zupanchich in družina, Duluth Mesabe & Northern Employees, Mr. in Mrs. Morris Bourquin in družina, T. M. & N. Employees Association, Mr. in Mrs. Louis Champa.

Lepa hvala vsem, ki so darovali za maše zadušnice, namreč: Miss Amelia Markovich, Mr. in Mrs. Vincent Markovich, Mr. in Mrs. Frank Kaplan, Anton Pluth, Mr. in Mrs. Frank Verantič, Mr. in Mrs. Frank Terlep, Mrs. Mary Markovich, Kapsh bratje, Matt in Joe Muhvich, Mr. in Mrs. John Koschak Sr., Mr. Stephan Banovec, Mr. in Mrs. Joe Shustersich, Mr. in Mrs. Joseph Gerzin, Mr. in Mrs. Nick Popovich, Mr. in Mrs. Joseph Koščak, Mr. in Mrs. Anton Perushek, Mr. Matt Shustersich, Mr. in Mrs. Jacob Grahek, Mr. in Mrs. Joseph Kolenc.

Lepa hvala vsem, ki so dragega pokojnika tolažili v bolezni, vsem, ki so ga obiskali na mrtvaškem odru in ki so ga spremili na njegovi zadnji poti.

Žalujoči ostali: Joseph in Barbara Markovich, stariši; Joseph, Steve, Julius, Matt in Albert, bratje; Mary, Annie, Amelia, Joan, Barbara, Margareth, sestre.

Ely, Minn., 2. avgusta 1930.